Rocketdyne
North American Rockwell

6633 Canoga Avenue
Canoga Park, California 91304

F-1 ENGINE FAMILIARIZATION
TRAINING MANUAL

Prepared By:
CONFIGURATION ACCOUNTING,
LOGISTICS ENGINEERING AND TRAINING
Dept. 580-722

USE THIS DATA FOR
TRAINING PURPOSES ONLY

SATURN V/APOLLO VEHICLE

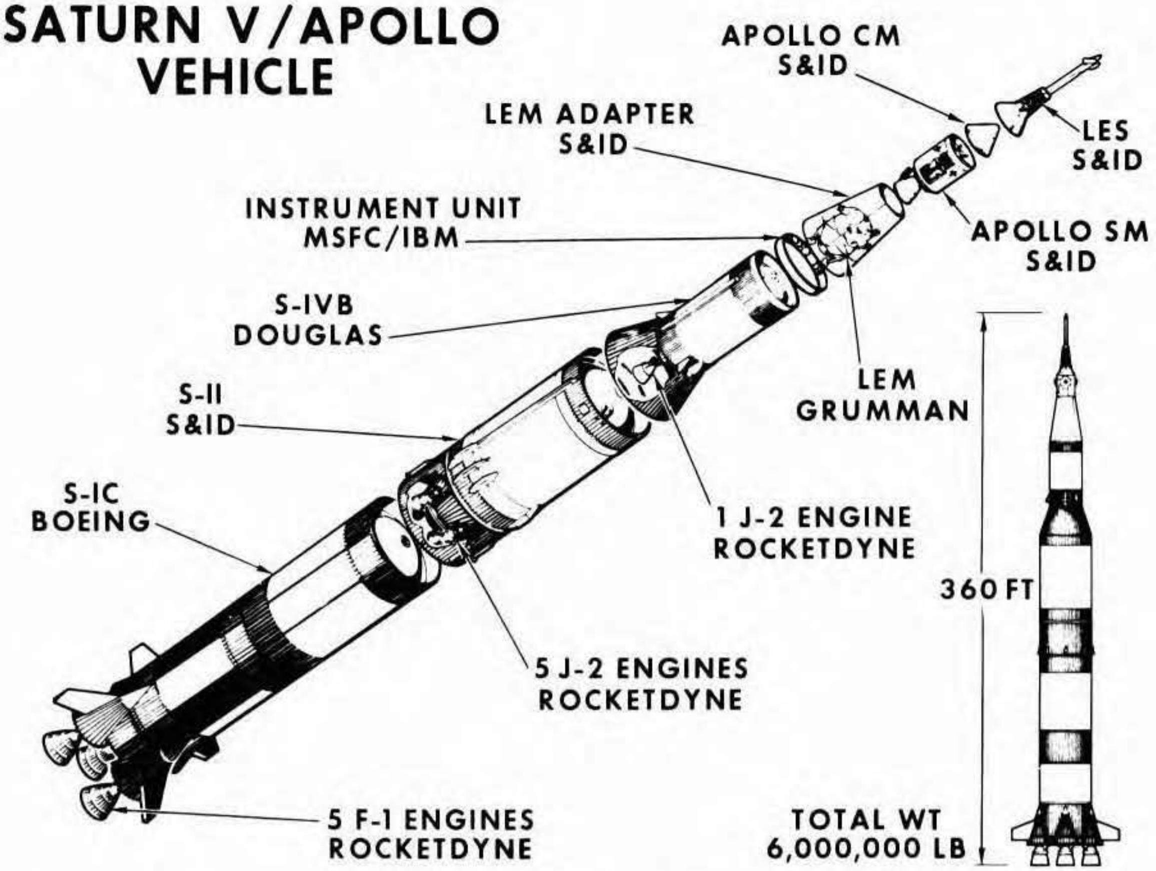

S-IC STAGE

SATURN V, 1ST STAGE

- PRIME CONTRACTOR: BOEING
  ASSEMBLED AT MICHOUD, LA.
- ENGINES: 5 ROCKETDYNE F-1
- THRUST: 7,500,000 LB
  EACH ENGINE: 1.5 MILLION LBS
- BURNING TIME: 150 SEC (2.5 MIN)
- PROPELLANT: 4,400,000 LB
  RP-1 - 206,000 GALS
  LOX - 340,000 GALS
- GROSS WT: 4,800,000 LB
- BURNOUT WT: 425,000 LB
- ALTITUDE: 0-200,000 FT (38 MILES)
- VELOCITY: 0-7,700 FT/SEC (5,460 MPH)

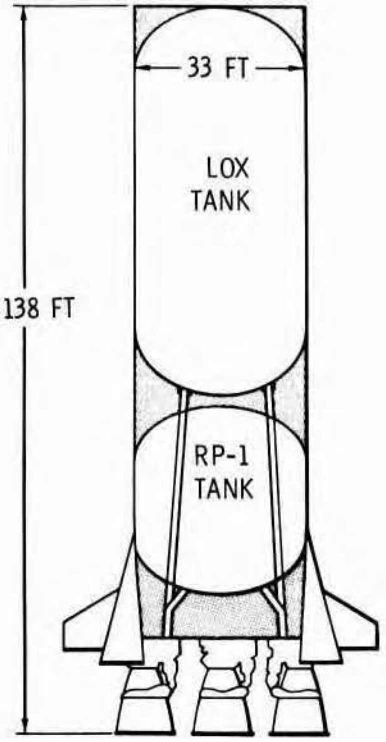

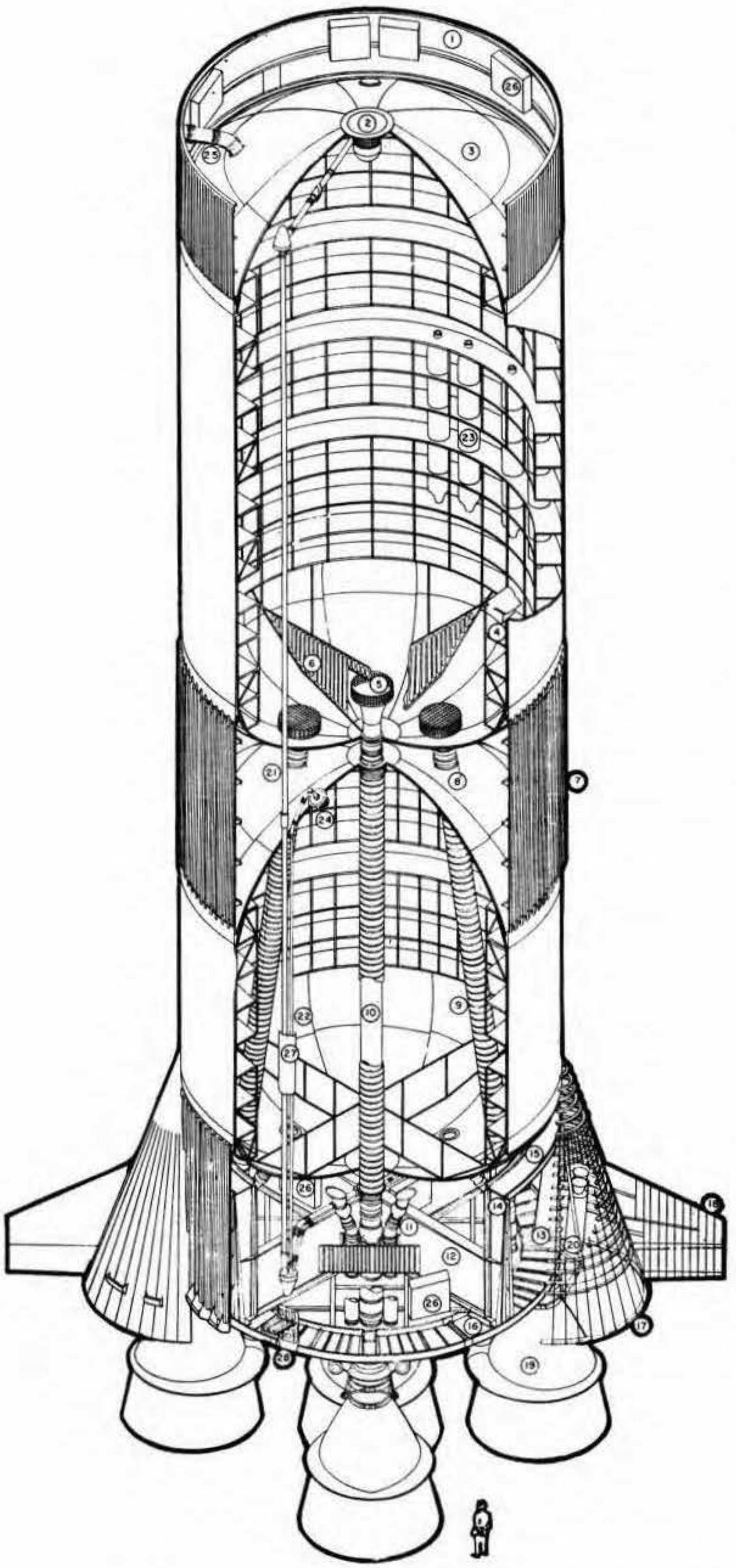

MAJOR COMPONENTS

1. FORWARD SKIRT STRUCTURE
2. GOX DISTRIBUTOR
3. LOX TANK
4. ANTI-SLOSH BAFFLES
5. ANTI-VORTEX DEVICE
6. CRUCIFORM BAFFLE
7. INTERTANK STRUCTURE
8. FUEL TANK
9. SUCTION LINE TUNNELS
10. LOX SUCTION LINES
11. FUEL SUCTION LINES
12. CENTER ENGINE SUPPORT
13. THRUST COLUMN
14. HOLD DOWN POST
15. UPPER THRUST RING
16. LOWER THRUST RING
17. ENGINE FAIRING
18. FIN
19. F-1 ENGINE
20. RETRO ROCKETS
21. GOX LINE
22. HELIUM LINE
23. HELIUM BOTTLES
24. HELIUM DISTRIBUTOR
25. LOX VENT LINE
26. INSTRUMENTATION PANELS
27. CABLE TUNNEL
28. UMBILICAL PANEL

SATURN C-5, S-1C STAGE

SECTION I

DESCRIPTION AND OPERATION

1-1. SCOPE. This section contains a general description of the F-1 propulsion system and a detailed description of each subsystem and component. Engine operation from the preparation phase through and including the engine cutoff phase is defined. Also included, are external inputs necessary for engine operation, typical engine operating parameters, and a description of the flow the engine follows from the time it is accepted by the Customer through Apollo/Saturn V launch.

1-2. F-1 ROCKET ENGINE.

1-3. The F-1 propulsion system was developed to provide the power for the booster flight phase of the Saturn V vehicle. Five engines are clustered in the S-IC stage of the Saturn V to obtain the necessary 7,610,000 pounds thrust.

1-4. The engine features a two-piece thrust chamber that is tubular-walled and regeneratively cooled to the 10:1 expansion ratio plane, and double-walled and turbine gas cooled to the 16:1 expansion ratio plane; a thrust chamber mounted turbopump that has two centrifugal pumps spline-connected on a single shaft driven by a two-stage, direct-driven turbine; one-piece rigid propellant ducts that are used in pairs to direct the fuel and oxidizer to the thrust chamber; and a hypergolic fluid cartridge that is used for thrust chamber ignition.

1-5. The engine is within an envelope 12 feet in diameter and 16 feet long and weighs approximately 18,500 pounds dry. Thrust vector changes are achieved by gimbaling the entire engine. The gimbal block is located on the thrust chamber dome, and actuator attach points are provided by two outriggers on the thrust chamber body.

1-6. Component locations on the engine in the horizontal position are basically referenced to No. 1 (left) (figure 1-1) or No. 2 (right) (figure 1-2) sides of the engine as viewed from the exit end of the thrust chamber with the turbopump at 12 o'clock (top) and the hypergol manifold assembly at 6 o'clock (bottom). Component locations on the engine in the vertical position are referenced to the principal component on the four sides of the engine (eg, gas generator side (No. 1), engine control valve side (No. 2), turbopump side, and hypergol manifold side). A view of the forward end of the engine is shown in figure 1-3.

1-7. ENGINE PHYSICAL DESCRIPTION.

1-8. The F-1 engine is a single-start, fixed-thrust, liquid bipropellant engine, calibrated to develop a sea-level-rated thrust of 1,522,000 pounds with a specific impulse (I_{sp}) of 265.3 seconds. Engine propellants are liquid oxygen and RP-1 fuel at a mixture ratio of 2.27:1. The RP-1 fuel is used as the working fluid for the gimbal actuators and for the engine control system and is also used as the turbopump bearing lubricant. The F-1 engine is comprised of seven operational systems:

(1) A propellant feed system, which supplies pressurized propellants for combustion and hydraulic pressure for the engine control system.

(2) An ignition system, which initiates combustion in the gas generator and the thrust chamber.

(3) A gas generating system, which produces the energy to drive the turbopump and condition propellant tank pressurants.

(4) An engine control system, which regulates the start, operating level, and shutdown of the engine.

(5) A flight instrumentation system, which measures selected engine parameters for monitoring and evaluating the operational characteristics of the engine.

(6) An environmental conditioning system, which protects the engine from extreme temperature environment caused by plume radiation and backflow during flight.

(7) A purge and drain system, which inhibits contamination and facilitates the overboard disposition of expended fluids. Detailed informa- of the engine system and its components are in the following paragraphs. An engine schematic (figure 1-4) and engine parameters (figure 1-5) are included to support the text. Detailed information on engine operation is presented in paragraphs 1-121 through 1-133.

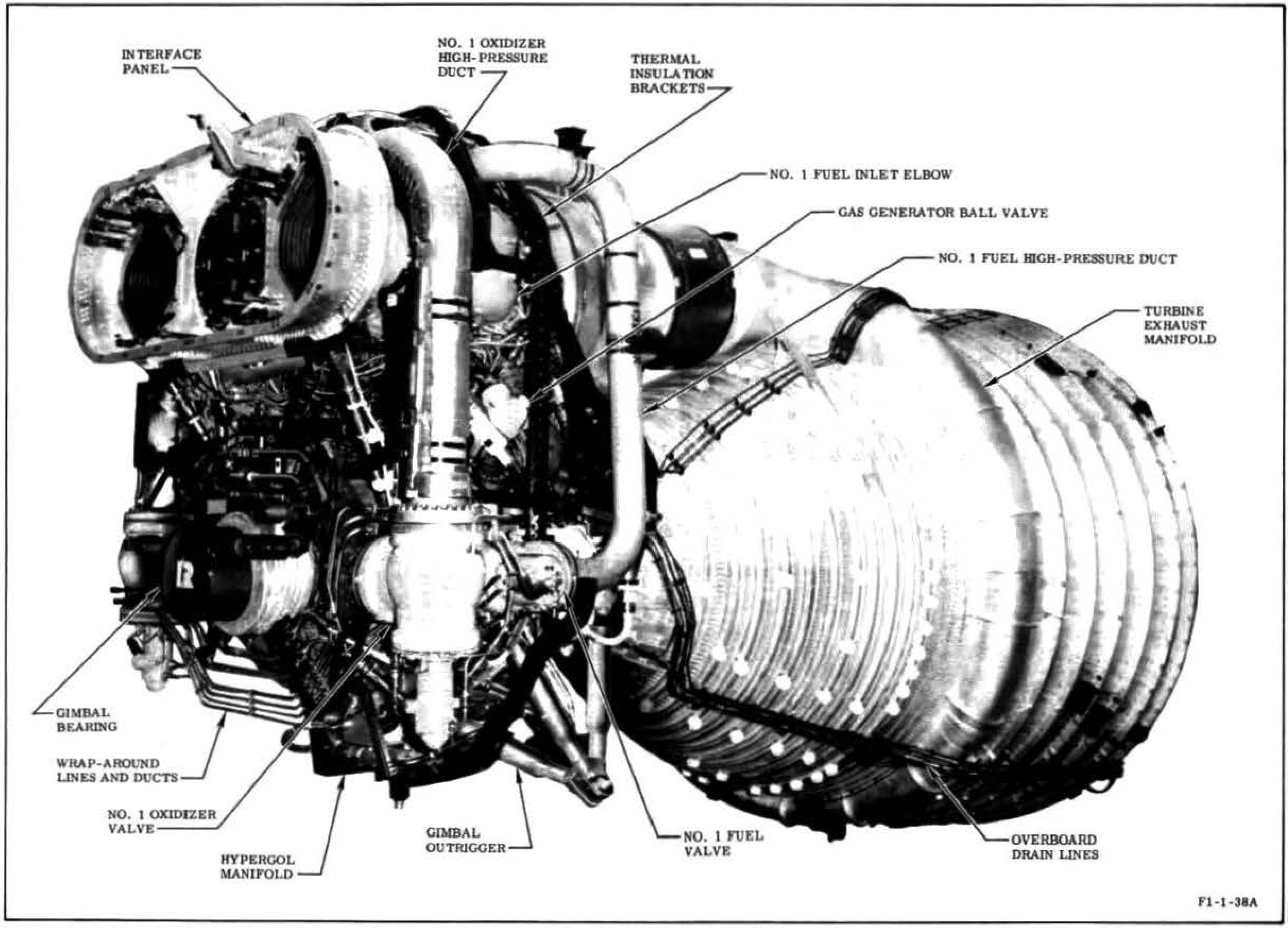

Figure 1-1. F-1 Rocket Engine, Number One Side

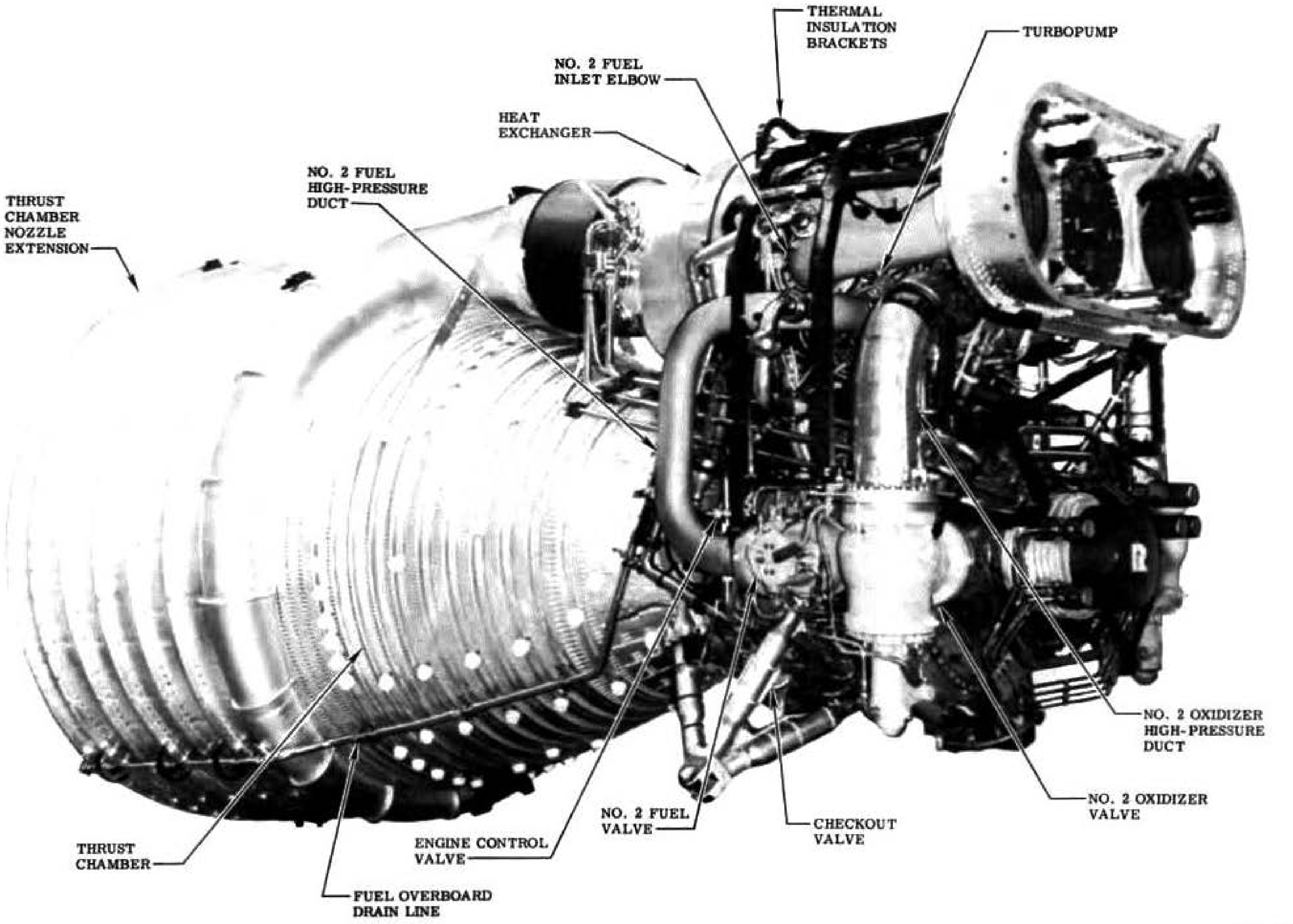

Figure 1-2. F-1 Rocket Engine, Number Two Side

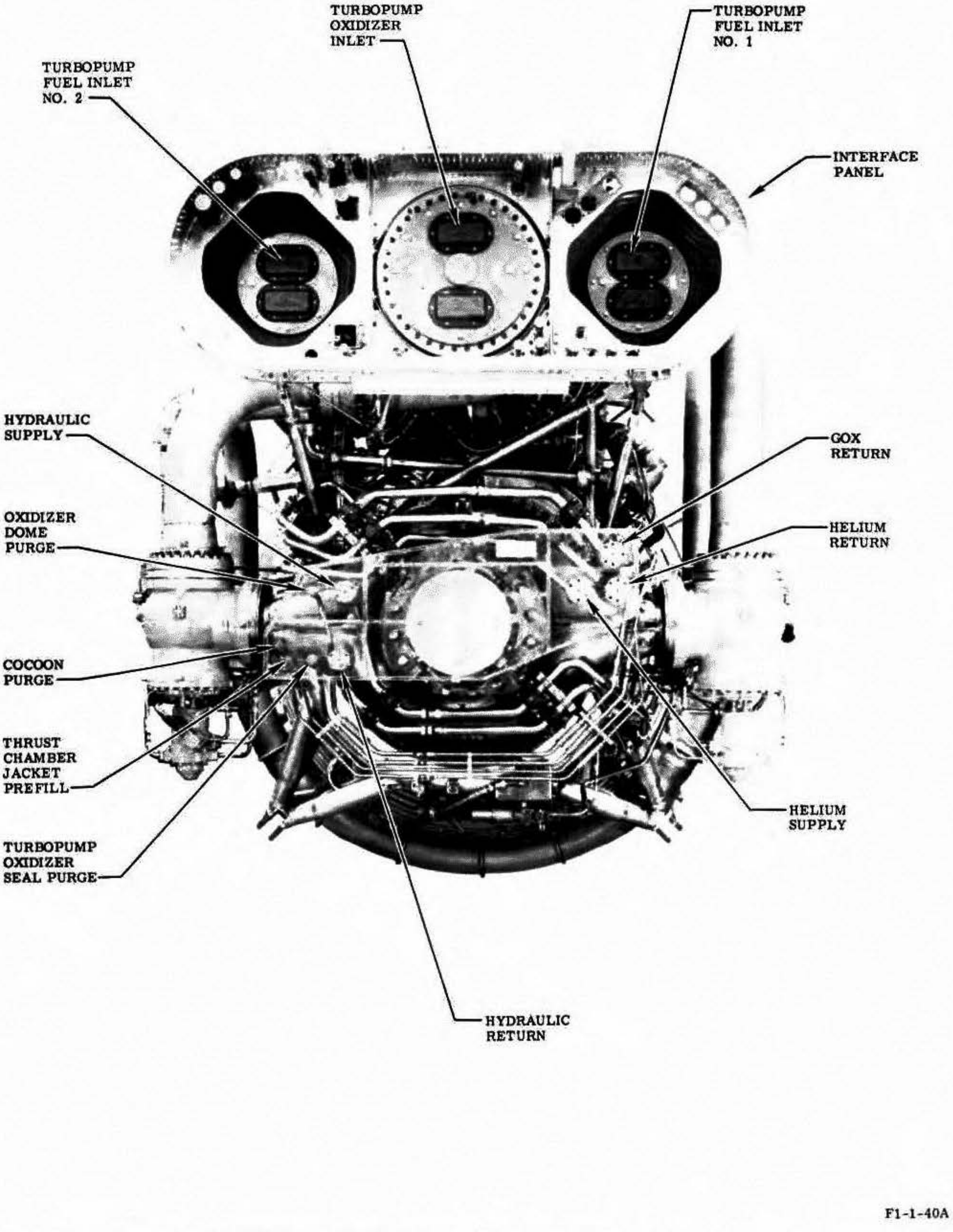

Figure 1-3. F-1 Rocket Engine, Forward End

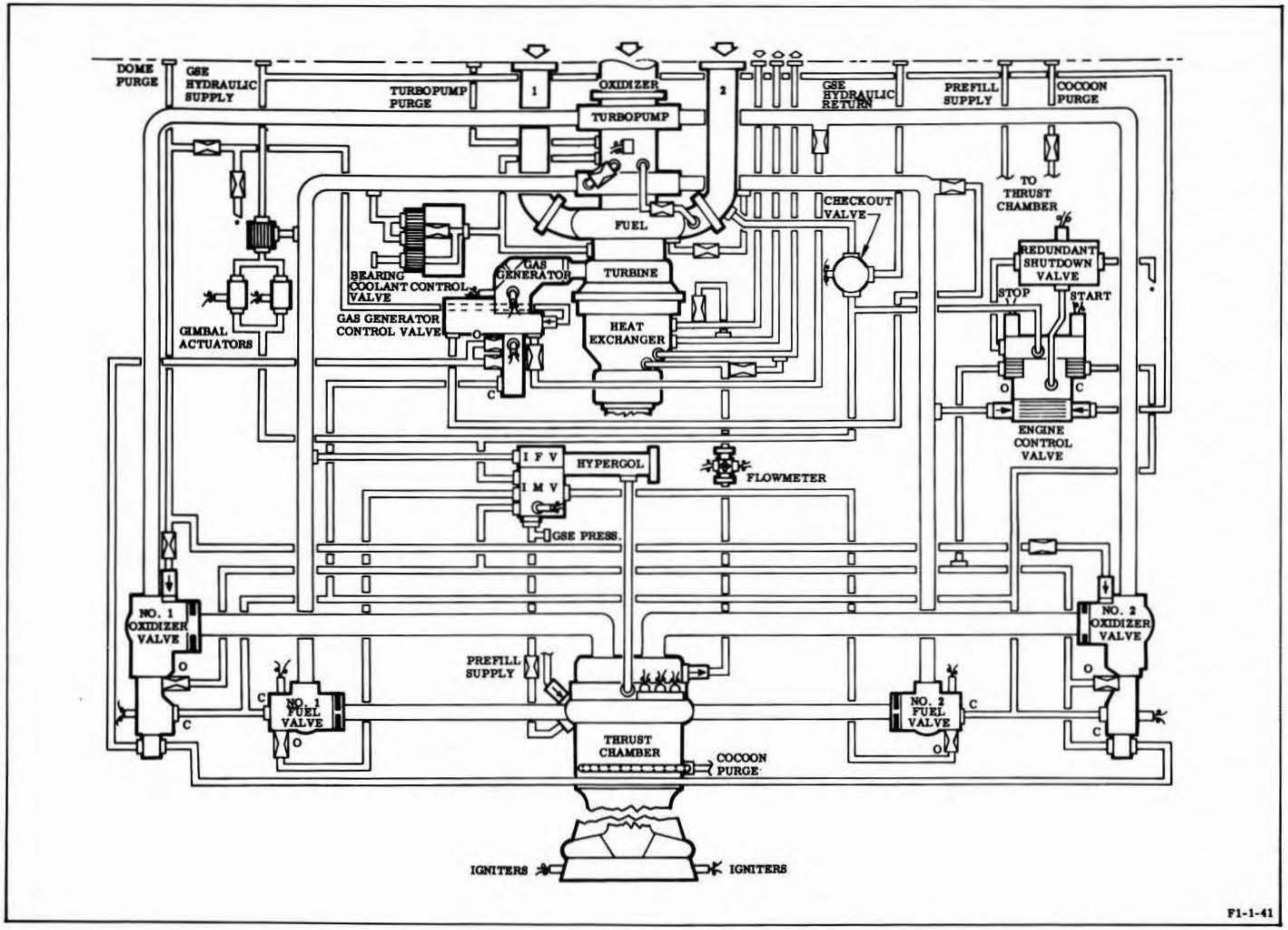

Figure 1-4. F-1 Engine Schematic

Thrust level (sea level)	1,522,000 pounds
Specific impulse (sea level)	265.3 seconds
Total propellant flowrate	5,736 lb/sec (40,644 gpm)
a. Fuel	1,754 lb/sec (15,606 gpm)
b. Oxidizer	3,982 lb/sec (25,038 gpm)
Mixture ratio	2.27:1
Expansion ratio	16:1
Thrust chamber pressure	1,125 psia
Thrust chamber temperature	5,970° F
Thrust chamber exit pressure (16:1)	9.6 psia
Fuel pump discharge pressure	1,870 psia
Oxidizer pump discharge pressure	1,602 psia
Gas generator flowrate (included in total)	167 lb/sec
a. Fuel	118 lb/sec
b. Oxidizer	49 lb/sec
Gas generator mixture ratio	0.416:1
Gas generator combustor pressure	980 psia
Gas generator temperature	1,453° F
Turbine speed	5,492 rpm
a. Time from turbopump initiation to rated speed	5.2 seconds
b. Time from cutoff to zero rpm	3.5 seconds
Turbine brake horsepower	53,146 hp
Nozzle extension coolant gas temperature	1,138° F
Hydraulic recirculation flowrate	11.6 ±1.1 gpm at 1,500 psig
Engine dry weight (average)	18,619 pounds

Figure 1-5. Nominal F-1 Engine Parameters

1-9. PROPELLANT FEED SYSTEM DESCRIPTION.

1-10. The propellant feed system transfers oxidizer and fuel, under pressure, from the propellant tanks to the thrust chamber and gas generator. The system consists of the following major components: A thrust chamber, a turbopump, two oxidizer valves, two fuel valves, two high-pressure oxidizer ducts, two high-pressure fuel ducts, and two fuel inlet elbows.

1-11. THRUST CHAMBER ASSEMBLY DESCRIPTION.

1-12. The thrust chamber assembly (figure 1-6) is the engine section within which the engine thrust is developed and by which this thrust is transmitted to the thrust structure of the booster stage or test stand. The thrust is developed through the process of burning propellants in the combustion chamber and accelerating, to supersonic velocity, the gaseous products of this combustion through an expansion nozzle. The thrust is transmitted through a gimbal bearing and two gimbal actuator outrigger assemblies.

1-13. The thrust chamber assembly consists of a two-piece thrust chamber, an injector, an oxidizer dome and manifold, and a gimbal assembly. The gimbal assembly attaches to the oxidizer dome by eight bolts. The oxidizer dome is bolted to the injector by 16 inner-dome support bolts, and both the oxidizer dome and injector are bolted to the thrust chamber body by 64 outer-dome attach bolts. The dome, injector, and thrust chamber body are indexed to each other by one diamond-shaped and one round, noninterchangeable index pin, spaced 180 degrees apart at the interface flanges below the two oxidizer dome inlets. The mating flanges of the dome and injector are sealed by a Teflon-filled Flexitallic gasket. The mating flanges of the injector and thrust chamber body are sealed at the outer diameter by a Viton-A O-ring and at the inner diameter by a hollow Inconel-X O-ring. The Inconel-X O-ring incorporates drilled holes in its outer diameter to permit injector manifold fuel pressure to enter the hollow section to increase its sealing capability. Thrust chamber parameters are presented in figure 1-7. Thrust chamber and nozzle extension are illustrated in figure 1-8.

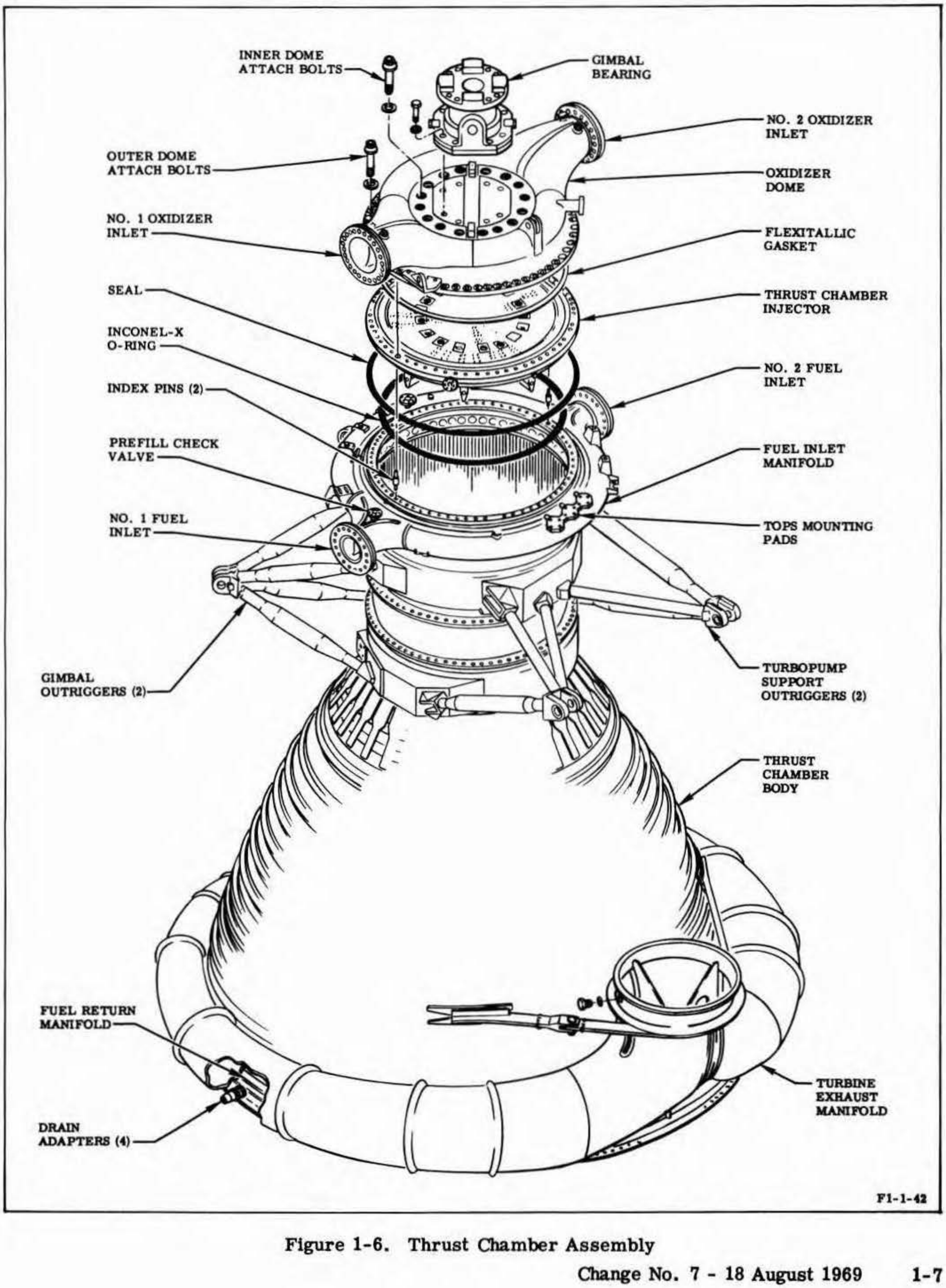

Figure 1-6. Thrust Chamber Assembly

Thrust level (sea level)	1,522,000 pounds
Mixture ratio	2.40:1
Propellant flowrates	
a. Oxidizer	3,933 lb/sec
b. Fuel	1,636 lb/sec
Injector end pressure	1,125 psia
Fuel injector manifold pressure	1,222 psia
Exit pressure (16:1)	9.6 psia
Combustion area temperature	5,970° F
Nozzle extension coolant gas temperature	1,138° F
Fuel inlet manifold pressure	1,466 psia
Injector pressure drops	
a. Oxidizer	309 psia
b. Fuel	97 psia

Oxidizer dome pressure drop	57 psia
Fuel jacket pressure drop	244 psia
Valves pressure drops	
a. Oxidizer	91 psia
b. Fuel	210 psia
Expansion ratios	
a. Thrust chamber	10:1
b. Thrust chamber and nozzle extension	16:1
Fuel jacket prefill	
a. Solution	Ethylene glycol
b. Capacity	103-105 gallons

Figure 1-7. Nominal Thrust Chamber Parameters

1-14. THRUST CHAMBER BODY DESCRIPTION. The thrust chamber body contains a combustion chamber for the burning of the propellants, and a nozzle of the required 10:1 expansion ratio for expelling gases produced by the burned propellants at the supersonic velocity necessary to produce the desired thrust.

1-15. The thrust chamber body is a furnace-brazed, tubular-walled, regeneratively fuel-cooled, bell-shaped chamber incorporating two outrigger arms to support the turbopump and two outrigger arms to which the gimbal actuators attach. A fuel inlet manifold and a turbine exhaust manifold are welded to opposite ends of the chamber. One hundred seventy-eight primary tubes, hydraulically formed from 1-3/32 inch outside diameter Inconel-X tubing, make up the chamber body above the 3:1 expansion ratio plane (approximately 30 inches below the throat centerline plane). Three hundred fifty-six one-inch-outside-diameter secondary tubes of the same material form the chamber from the 3:1 to the 10:1 expansion ratio plane. A raised weld bead with the tube number and a directional flow arrow, identify fuel-up tube No. 1 and fuel-down tubes No. 60 and 120 on the chamber internal faces of the injector end ring and fuel return manifold. External to the chamber the same tubes are similarly identified on reinforcing bands and straps below the thrust chamber throat.

1-16. Two secondary tubes are brazed to each primary tube at the 3:1 expansion ratio area plane. Every other primary tube is a fuel-down tube and is slotted on its outboard side at the fuel inlet manifold area into which fuel from the inlet manifold is directed. An orificed plug is brazed into the tube above the slot to permit 30 percent of the fuel to go directly to the fuel injector manifold. The remaining 70 percent of the fuel is used for regeneratively cooling the thrust chamber and is directed down the tube to the fuel return manifold at the end of the chamber. From the fuel return manifold, the fuel is directed by the adjacent fuel return tubes to the fuel injector manifold. The return manifold is welded to the bottom of the thrust chamber secondary tubes and incorporates four drain ports, located 90 degrees apart, to drain residual fluids. Forty lugs are welded to the inside wall of the return manifold for attaching the turbine exhaust leak-test fixture.

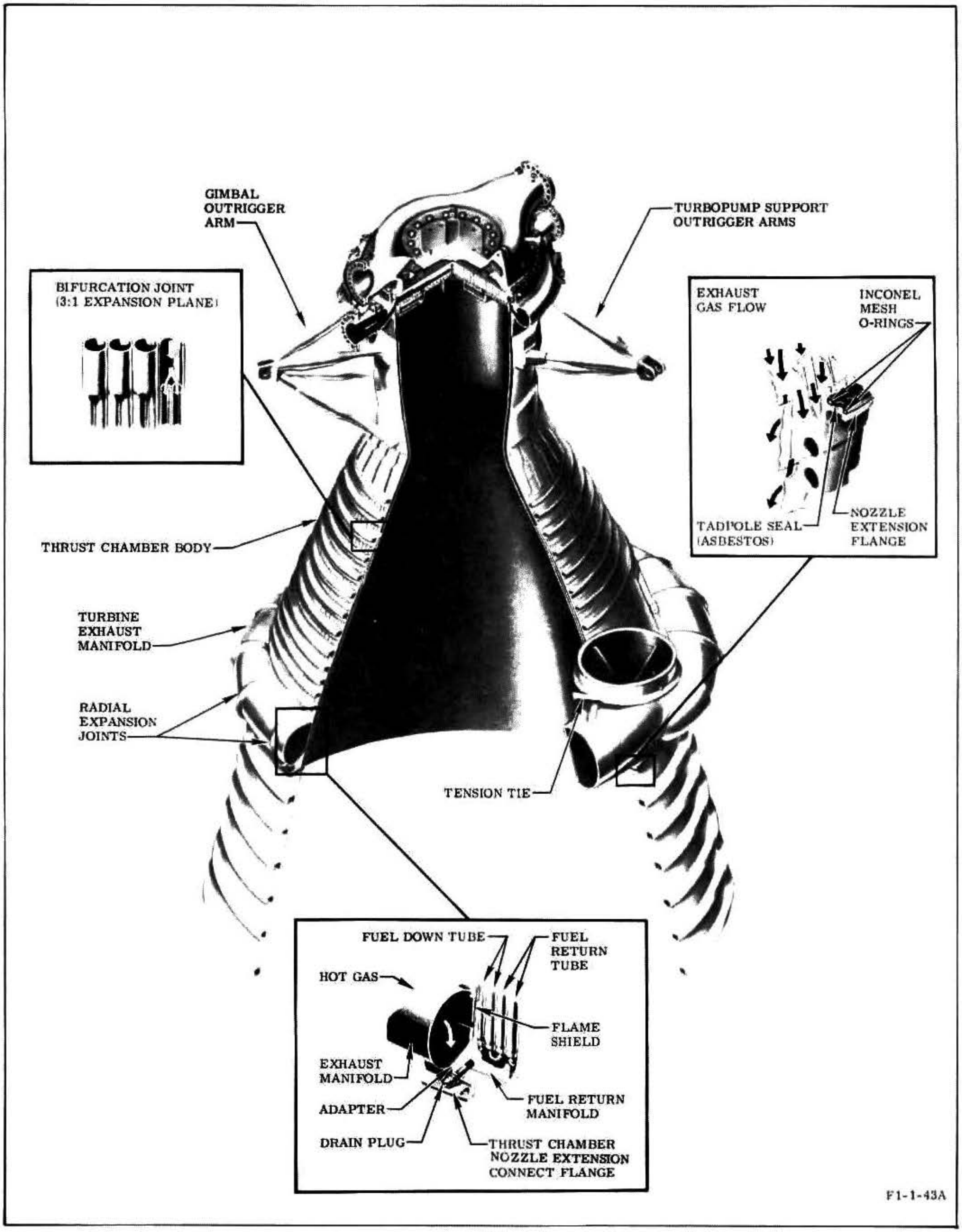

Figure 1-8. Thrust Chamber and Nozzle Extension

1-17. The fuel inlet manifold, welded to the upper end of the chamber body, incorporates two flanges, 180 degrees apart, for mounting the main fuel valves. A three-section flange for mounting the thrust OK pressure switches, and another for attaching the prefill check valve, are located on the inlet manifold. The fuel inlet manifold distributes fuel from the main fuel valves to the thrust chamber fuel-down tubes through angled, radial passages drilled through the inner wall of the manifold and alined with slots in the primary fuel-down tubes.

1-18. The turbine exhaust manifold collects and evenly distributes the turbine exhaust gas to the area between the walls of the nozzle extension. The exhaust manifold is a CRES torus of decreasing (from inlet to exit) cross-sectional area incorporating 15 omega expansion joints to compensate for thermal growth. Splitter plates at the inlet and flow vanes at the exit area contribute to the uniform distribution of the exhaust gases into the nozzle extension. The exhaust manifold is welded to a flame shield that is welded to the outer wall of the thrust chamber.

1-19. THRUST CHAMBER INJECTOR DESCRIPTION. The thrust chamber injector distributes the propellants into the combustion chamber at the proper mixture ratio, pressure, and spray pattern to initiate and sustain stable combustion. It is a CRES, 31-ring, plate-type injector, divided into 13 compartments by 2 circular and 12 radial baffles, which dampen tangential and transverse combustion instability shock waves generated during combustion. The compartments are identified numerically, 1 through 13, and the baffles alphabetically, A through N. (See figure 1-9.) The 31-ring grooves consist of 16 fuel ring grooves alternating with 15 oxidizer ring grooves. The fuel ring grooves are supplied with fuel from the injector manifold by 32 radial passages, and the oxidizer ring grooves are supplied with oxidizer from the oxidizer dome by axially drilled holes. Fourteen copper rings, orifice-drilled to provide a doublet fuel-on-fuel impingement, and 2 circular, fuel-cooled copper baffles are brazed to the fuel ring grooves. Fifteen copper rings, orificed-drilled to provide a doublet oxidizer-on-oxidizer impingement, are brazed to the oxidizer ring grooves. The twelve radial, fuel-cooled, copper baffles are supplied with fuel by the outer circular baffle to which they are brazed. Two igniter fuel housings in each of the 12 outer compartments and one igniter fuel housing in the center compartment, connected by individual fuel feed tubes to the igniter manifold, inject igniter fuel to the compartments. The center of compartment No. 13 is threaded for the attachment of the throat plug shaft.

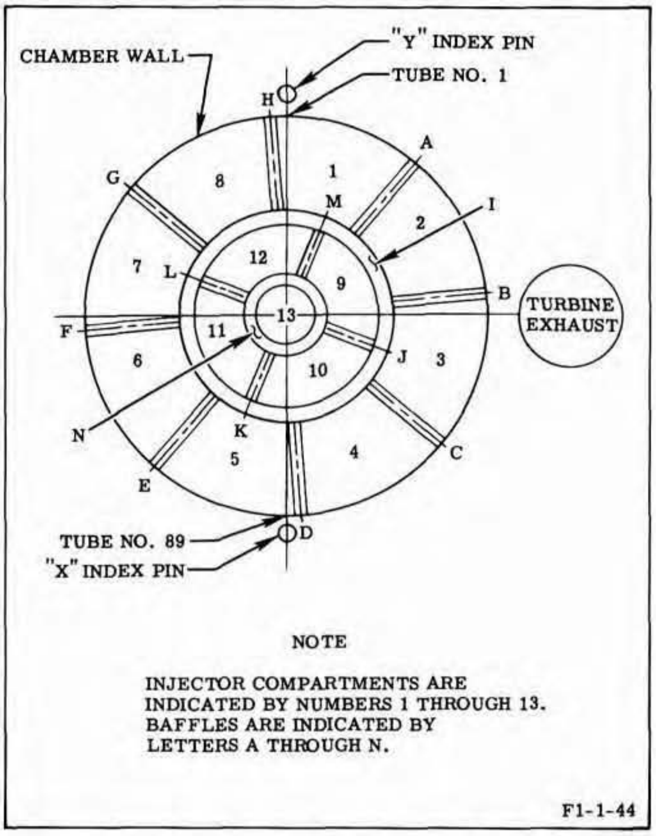

NOTE

INJECTOR COMPARTMENTS ARE INDICATED BY NUMBERS 1 THROUGH 13. BAFFLES ARE INDICATED BY LETTERS A THROUGH N.

Figure 1-9. Thrust Chamber Injector Compartments and Baffles

1-20. THRUST CHAMBER OXIDIZER DOME AND MANIFOLD DESCRIPTION. The thrust chamber oxidizer dome and manifold assembly (figure 1-10) distributes oxidizer to the thrust chamber injector and provides the attach point for the gimbal assembly. The assembly is a welded, CRES and nickel-base alloy unit consisting of a dome body and a torus manifold. The dome body contains the attaching flange and support posts for interfacing with the injector, and a slotted and drilled mounting flange for interfacing with the gimbal assembly. The manifold incorporates two inlets 180 degrees apart, for mounting the No. 1 and No. 2 oxidizer valves, and a flanged boss for the heat exchanger oxidizer supply line. To prevent vortexing of the oxidizer, the manifold is isolated into two compartments by two torus dams welded at 90 degrees from the inlets.

1-21. GIMBAL BEARING ASSEMBLY DESCRIPTION. The gimbal bearing assembly (figure 1-11) permits the engine assembly to be rotated about its x- and z-axes and thereby provides limited control of the engine thrust vector to enable the vehicle's guidance system to perform vehicle pitch, yaw, and roll commands. The gimbal bearing assembly is also the principal thrust interface between the engine and vehicle or test stand. The assembly is a spherical, low-friction, steel universal joint, incorporating ball- and socket-type bearing surfaces. A composition of Teflon-impregnated Fiberglass (Fabroid) is bonded to the bearing surfaces of the sockets. The main components of the gimbal assembly consist of a misalinement plate, a seat, a body, a block, and a shaft. A silicone-impregnated Fiberglass boot around the gimbal bearing protects the assembly from adverse environmental conditions.

1-22. The misalinement plate is the interface between the oxidizer dome and gimbal assembly and incorporates guides and threaded-type adjustment devices to laterally position the assembly. Eight slotted holes in the plate flange, which coincide with eight threaded inserts in the dome flange, allow lateral adjustment of the plate along the x-axis. Eight oversized holes in the seat flange, coinciding with the slotted holes in the plate, allow lateral adjustment of the seat along the z-axis. The bottom guide recesses into a guide slot machined into the dome. The seat rests on the misalinement plate and has a guide slot into which the upper guide of the misalinement plate recesses. The seat contains the Fabroid-lined socket section within which the ball sections of the body move and incorporates two arms that support the shaft. The body is the engine interface to the vehicle or test stand structure. The body incorporates the ball section for the seat socket and the Fabroid-lined socket section for the ball section of the block. The block contains the ball section for the Fabroid-lined socket section of the body. The sides of the block are lined with Fabroid as are the surfaces of the hole into which the shaft fits. The shaft, through the support arms of the seat, transmits all bearing loads between the engine and vehicle. The shaft is prevented from rotating and moving axially by two plug and screw retainers. The Fabroid liners of the gimbal assembly are lubricated at assembly and require no further lubrication.

1-23. THRUST CHAMBER NOZZLE EXTENSION DESCRIPTION. The nozzle extension (figure 1-12) increases the thrust chamber expansion ratio to the ratio that provides an optimum average of engine performance over the powered phase of the booster stage trajectory. The nozzle extension is of welded construction, incorporating nickle-base-alloy inner and outer walls, separated by z-sections with CRES reinforcing channel bands welded to the outer wall circumference. Film cooling of the inner walls is achieved by injecting turbine exhaust gas, supplied to the cavity between the walls by the turbine exhaust manifold, into the thrust chamber exhaust stream through injector slots formed by 23 rows of overlapping shingles that form the inner wall. The thrust chamber nozzle extension is bolted to the thrust chamber exit-end ring after the engine is installed in the vehicle.

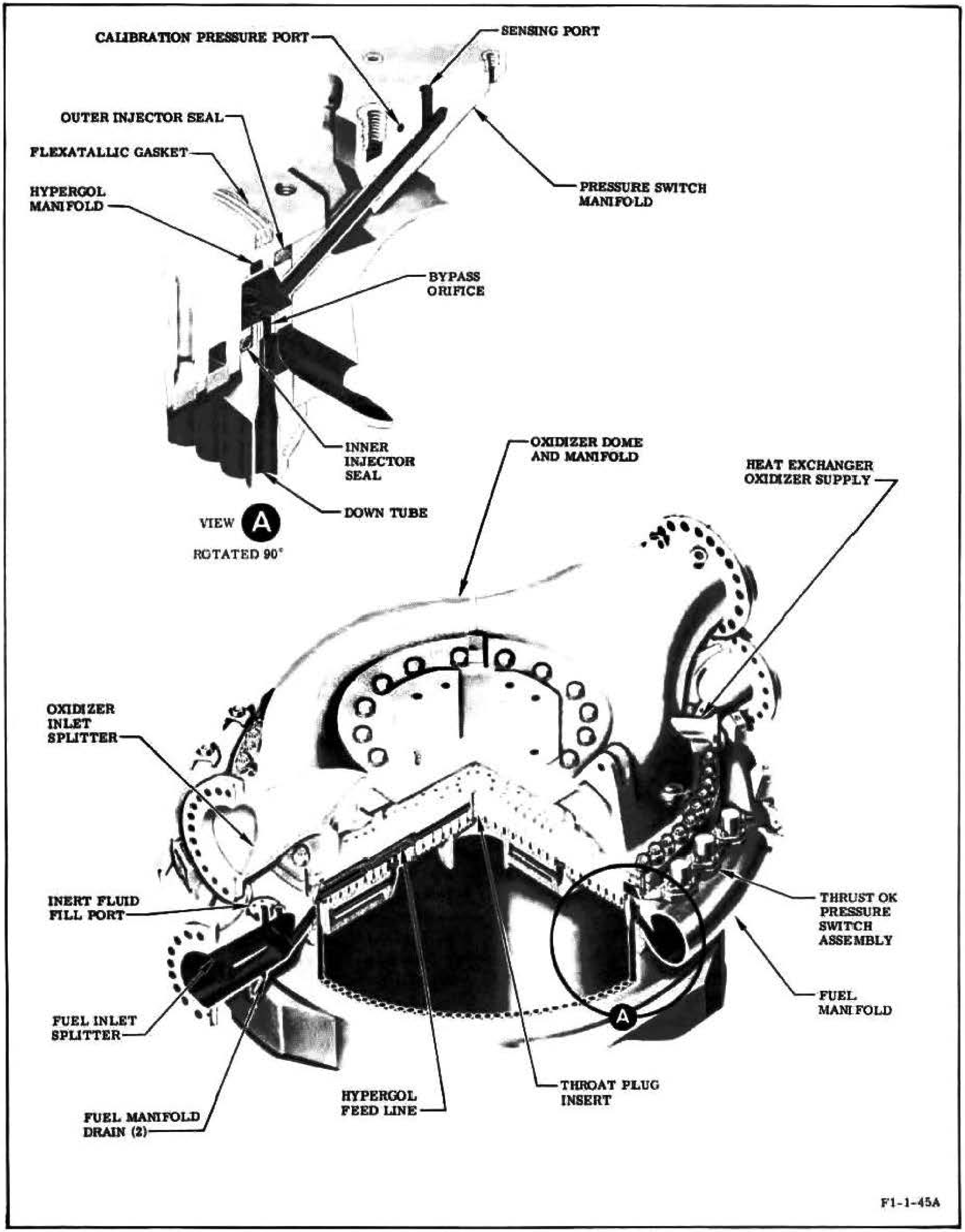

Figure 1-10. Thrust Chamber Oxidizer Dome

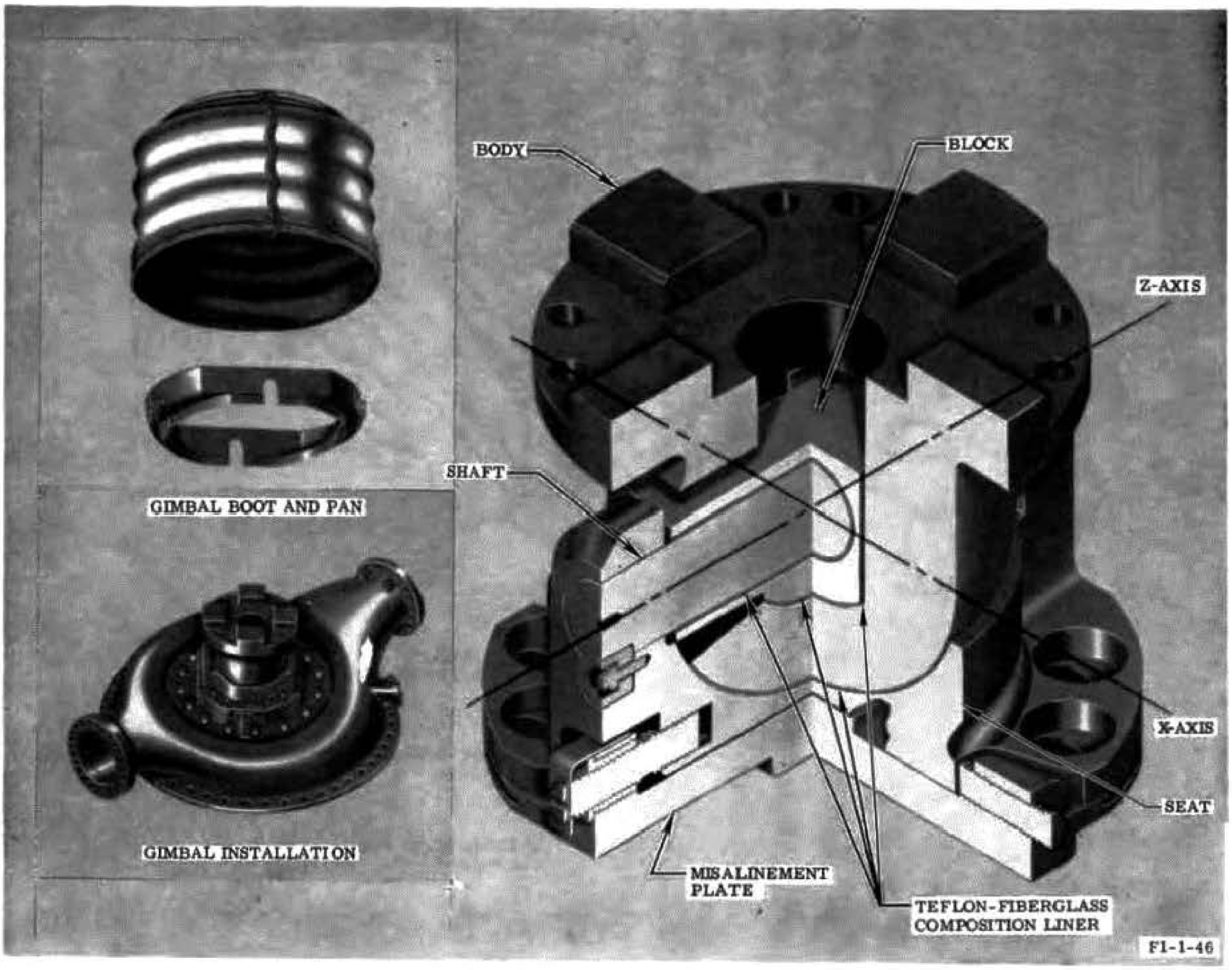

Figure 1-11. Gimbal Bearing

1-24. TURBOPUMP DESCRIPTION.

1-25. The turbopump assembly, designated the MK-10 turbopump, delivers propellants to the engine system at rated pressures and flowrates. The assembly is mounted parallel to the thrust chamber longitudinal centerline and is primarily supported by two three-legged outrigger assemblies welded to the chamber body and by the four high-pressure propellant ducts installed between the turbopump and the thrust chamber. The turbopump assembly (figures 1-13 and 1-14) is comprised of two centrifugal pumps, mounted back-to-back on a common shaft, directly driven by a two-stage, velocity compounded, impulse gas turbine. The main shaft and the rotating parts that attach directly to the shaft are dynamically balanced as an assembly prior to final assembly of the turbopump assembly. Plugs in the fuel impeller and weights in the turbine wheels are installed, as required during the procedures, to achieve the required balance. Dual discharge ports on each of the pumps balance the radial loads on the assembly. The shaft is supported by two electrically heated, fuel-cooled ball bearing assemblies at the oxidizer pump area, and one fuel-cooled roller bearing assembly at the turbine area. (See figure 1-15 for a cutaway view of the turbopump.) Six carbon-nose and three carbon-segmented seals, augmented by plastic (Kel-F, Teflon) and synthetic rubber (Buna-N, Viton-A) seals, perform sealing functions to isolate the propellants, cooling fluid, and hot gases to their respective areas.

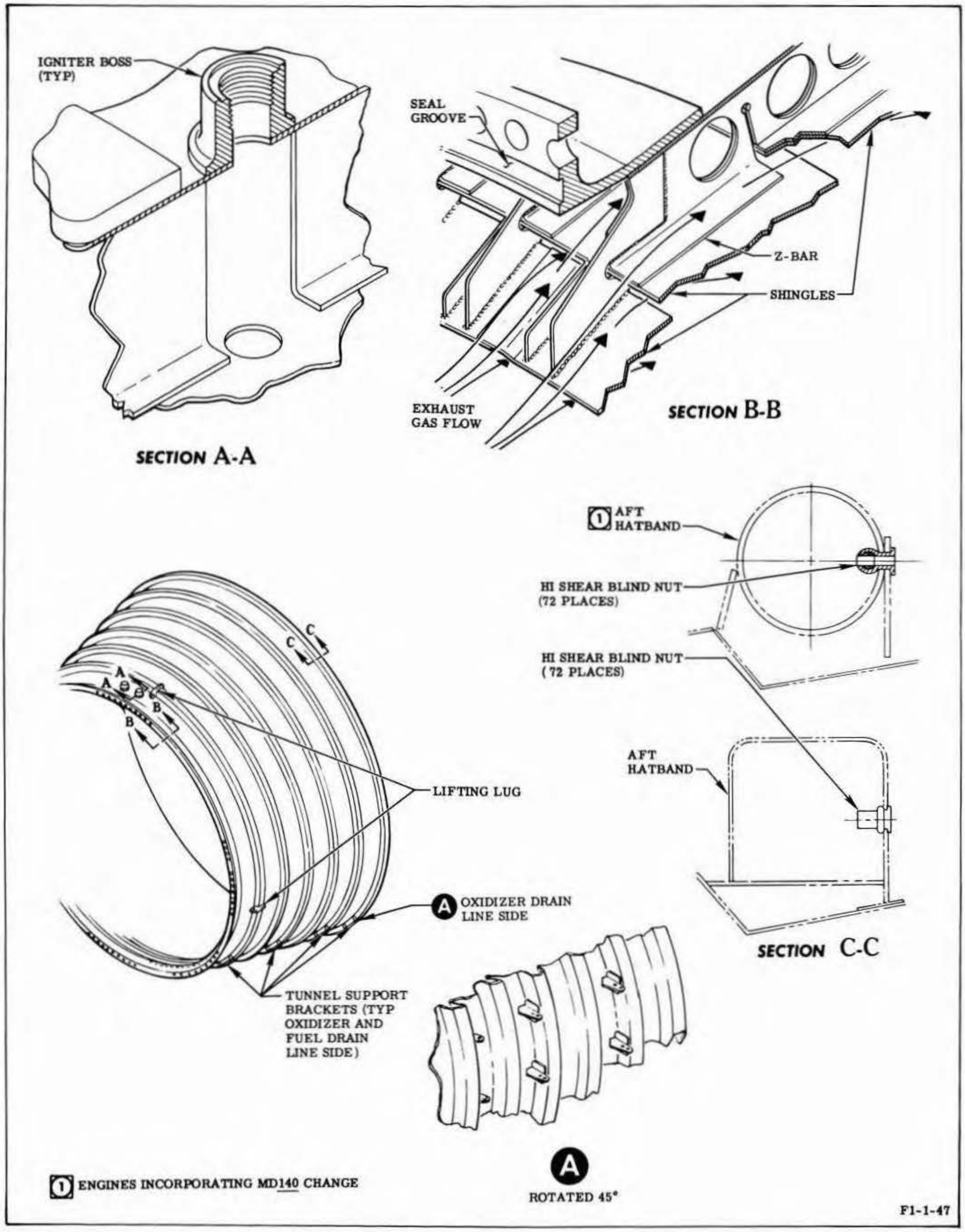

Figure 1-12. Thrust Chamber Nozzle Extension

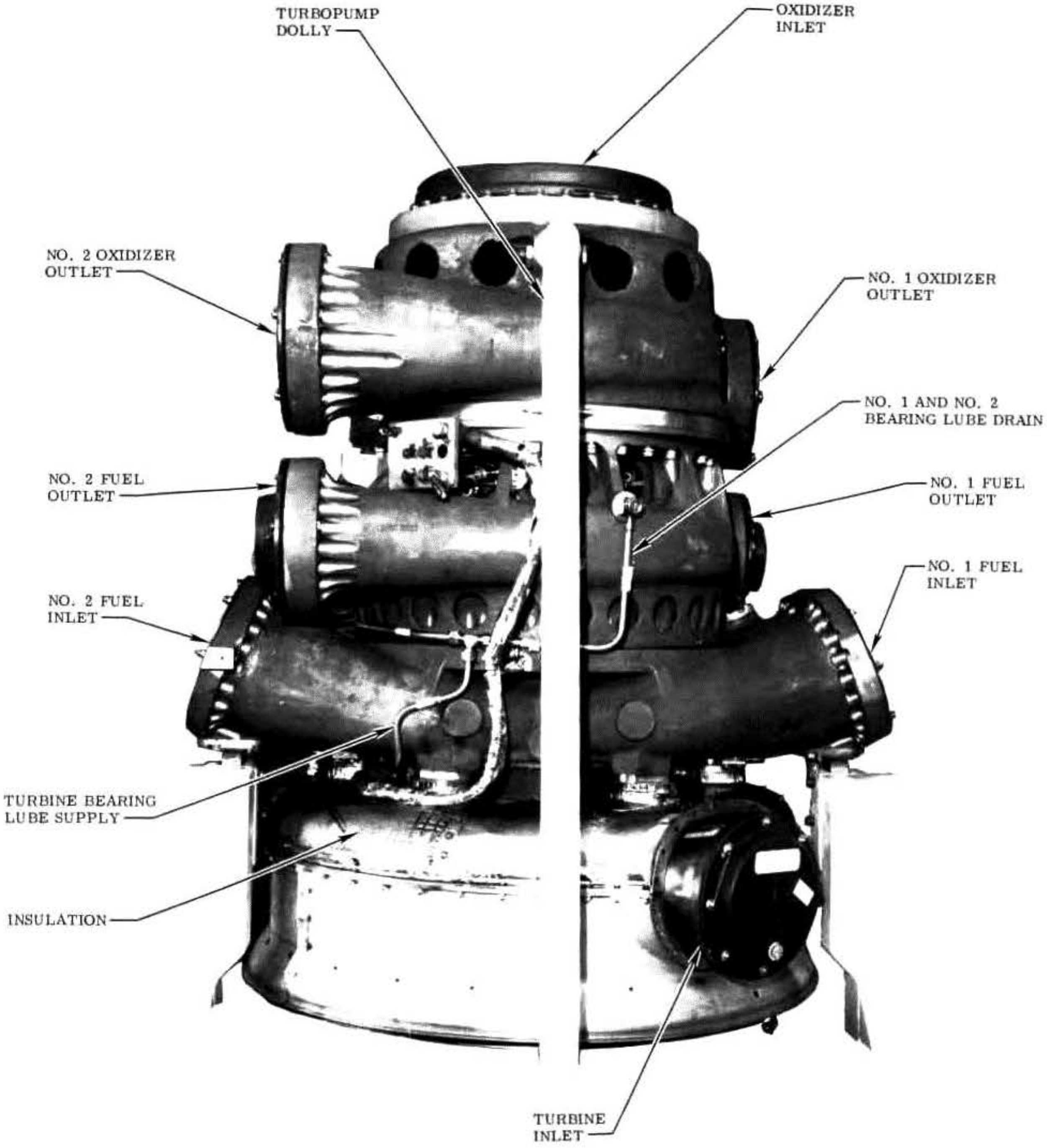

F1-1-48

Figure 1-13. Turbopump (Inboard)

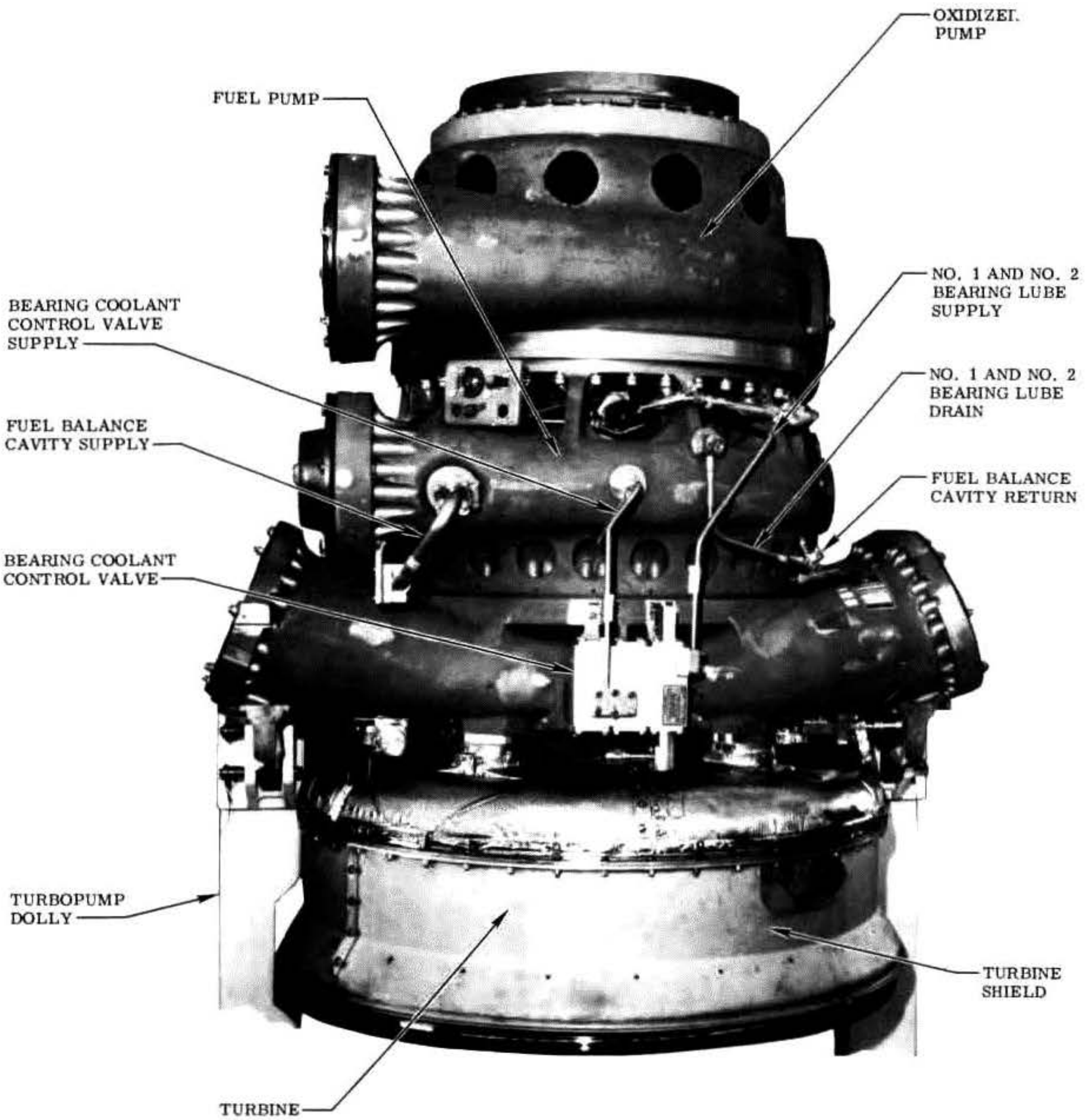

F1-1-49

Figure 1-14. Turbopump (Outboard)

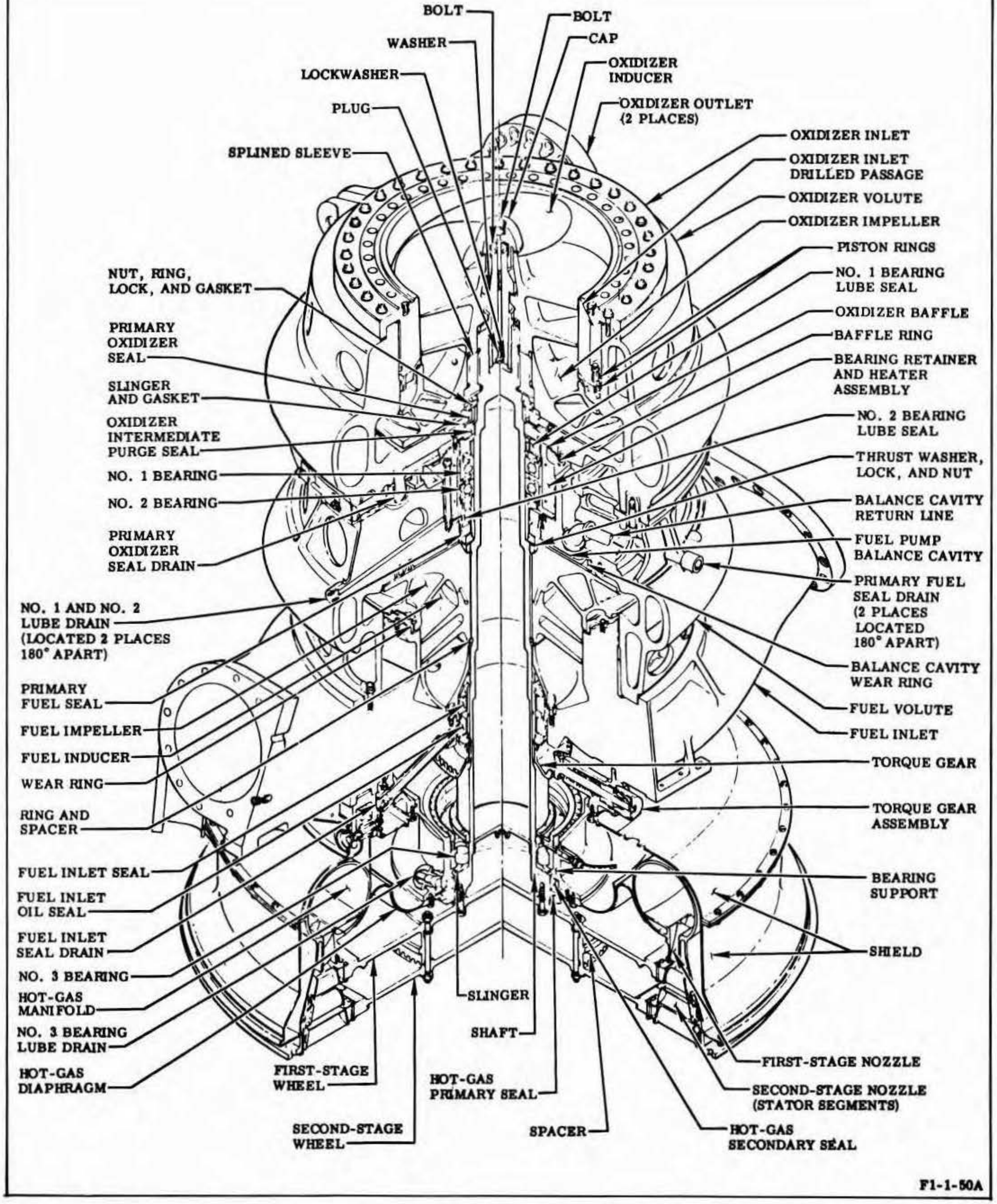

Figure 1-15. Turbopump Cutaway

1-26. The turbopump contains a balancing system to control the axial thrust loads imposed upon the shaft and ball bearing assemblies by the forces primarily generated by the differential pressure across the oxidizer impeller. The balancing system utilizes the area between the back of the fuel impeller and fuel volute as a balance cavity, to which fuel pressure from the discharge side of the fuel pump is directed and regulated, to partially counterbalance the axial thrust developed by the oxidizer impeller. Manual rotation of the turbopump shaft for the purpose of facilitating turbopump preservation and detecting excessive breakaway and running torque, is provided by a ring and pinion gear combination. The ring gear is splined to the turbopump shaft, and the pinion gear is mounted to the torque gear housing in a spring-loaded, disengaged position. When manual rotation of the pump shaft is required, the pinion gear is pushed in to engage with the ring gear and a rotating force applied. The sleeve of the ring gear contains two holes, spaced 180 degrees apart, which are used in conjunction with a magnetic transducer for monitoring shaft speed during engine operation.

1-27. The turbopump bearings are cooled by pressurized fuel supplied through a bearing coolant control valve to spray nozzles at the bearings. The fuel is routed in parallel from the coolant control valve to the No. 1 and No. 2 bearings and to the No. 3 bearing and is then drained overboard through the fuel overboard drain system. On engines incorporating MD145 change, the parallel routing from the bearing coolant control valve has been replaced by a series system. This change directs the drainage from the No. 1 and No. 2 bearings to splash-lubricate the No. 3 bearing and then overboard through the overboard drain system. Two cal-rod heaters, cast into the retainer block of the No. 1 and No. 2 bearings, prevent condensation and ice from forming on the bearings during engine standby.

1-28. The principal sections of the turbopump consist of an oxidizer pump section, a fuel pump section, and a turbine section. The three sections are structurally connected to each other by pins, which permit relative radial movement to compensate for the effects of thermal differences between the oxidizer, fuel, and turbine sections. A bearing coolant control valve mounted on the fuel pump section supplies coolant fuel to the bearings contained within the oxidizer pump and turbine sections. (See figure 1-16 for turbopump parameters.)

Weight (average)	3,150 pounds
Length	5 feet
Diameter	4 feet
Shaft speed	5,492 rpm
Oxidizer pump inlet pressure	65 psia
Oxidizer pump discharge pressure	1,602 psia
Oxidizer pump flowrate	3,986 lb/sec (25,063 gpm)
Fuel pump inlet pressure	45 psia
Fuel pump discharge pressure	1,870 psia
Fuel pump flowrate	1,756 lb/sec (15,621 gpm)
Turbine inlet temperature	1,453° F
Turbine inlet pressure	945 psia total
Turbine exit pressure	58 psia
Turbine brake horsepower	53,146 bhp
Bearing coolant flowrate (parallel system)	5.5 gpm
Bearing coolant flowrate (series system)	3.5 gpm
Shaft breakaway and running torque	20 ft/lb maximum

Figure 1-16. Nominal Turbopump Parameters

1-29. TURBOPUMP OXIDIZER PUMP DESCRIPTION. The principal parts of the oxidizer pump (figures 1-17 and 1-18) are an inducer, an impeller, a volute, two bearings, and the necessary seals to contain the oxidizer and coolant fuel within their respective areas of the oxidizer pump section. The inducer is splined to the shaft and increases the oxidizer inlet pressure to prevent cavitation and to direct the oxidizer into the inlet of the impeller. The impeller is installed on the shaft through an internally/externally splined coupler and imparts velocity to the fluid. The volute houses and supports the component parts of the oxidizer pump and converts the kinetic energy of fluid velocity to potential energy of fluid pressure. The oxidizer volute incorporates a ring that is pinned within a recess of the volute by 36 radially inserted pins. The fuel volute attaches to this ring by 36 bolts that are axially installed into threaded holes of the ring. Two discharge ports supply oxidizer to respective inlets of the oxidizer dome and manifold assembly. The bearings at the oxidizer pump section (figure 1-18), identified as No. 1 and No. 2 bearings, are a matched set of ball bearings that support the shaft at its forward end and absorb shaft axial loads.

1-30. Four major seals are contained in the oxidizer pump section. No. 1 seal (primary oxidizer seal) is a carbon-nose-to-mate-ring seal that seals the oxidizer propellant area from the bearing coolant fuel area. Leakage past this seal is directed overboard through the oxidizer overboard drain line. No. 2 seal (intermediate oxidizer seal) is a carbon-segmented seal with the spring-loaded carbon segments riding against the pump shaft and is a backup seal to isolate the oxidizer from the fuel coolant. A nitrogen gas purge is applied between the two segment layers and flows axially in both directions between the faces of the carbon segments and the shaft. Because carbon seals are primarily dynamic seals, the purge acts as a positive pressure barrier to isolate the oxidizer and bearing coolant from each other under static conditions. The purge flow to the oxidizer side of the seal is directed overboard through the same line that drains the primary oxidizer seal cavity.

1-31. No. 3 seal (No. 1 bearing lube seal) is a carbon-nose-to-mate-ring seal, which is the forward seal to confine the bearing coolant fluid within the bearing retainer and heater assembly. Leakage past No. 3 seal, along with the purge gas flowing from the coolant side of the intermediate oxidizer seal, is directed overboard by the nitrogen purge overboard drain line. No. 4 seal (No. 2 bearing lube seal) is a carbon-nose-to-mate-ring seal, which is the rear seal to confine the bearing coolant fluid within the bearing retainer and heater assembly. Leakage past No. 4 seal is directed to the fuel drain manifold by the primary fuel seal drain lines. Additional seals of the oxidizer pump section include two KEL-F coated, CRES, split piston rings, a Teflon-coated Naflex seal, and KEL-F wear-ring seal. The split piston rings recess into grooves of the oxidizer inlet and seal the interface of the oxidizer inlet skirt and volute wall. Any leakage past both seals is directed back to the inlet side of the pump through radial passages drilled in the oxidizer inlet assembly. The Naflex seal is installed between the attach flanges of the oxidizer inlet and the oxidizer volute. The KEL-F wear ring is a labyrinth seal attached to the oxidizer inlet. The wear ring effectively seals the high-pressure side of the pump from the low-pressure side by placing a series of orifices and expansion areas between the two sides. Synthetic rubber O-rings are also used in the carbon seal assemblies and in the bearing retainer and heater assembly.

1-32. **TURBOPUMP FUEL PUMP DESCRIPTION.** The principal parts of the fuel pump section (figures 1-17 and 1-18) are an inlet assembly, an inducer, an impeller, a volute, and the necessary seals to contain the fuel within the fuel section of the pump. The fuel inlet assembly is a dual inlet manifold that directs fuel to the inducer. The inlet assembly is bolted to the fuel volute on the top side and to the torque gear housing on the bottom. Six clevis fittings on the turbine section are bolted to the fuel inlet assembly to provide the primary structural interface between the fuel pump section and the turbine section. The inducer is splined to the shaft and increases the fuel inlet pressure to prevent cavitation and to direct the fuel into the eye of the impeller. The impeller is splined to the shaft and imparts velocity to the fluid. The volute converts the kinetic energy of fluid velocity to potential energy of fluid pressure. Thirty-six bolts connect the fuel volute to a pinned ring of the oxidizer volute to provide the primary structual interface between the fuel pump section and the oxidizer pump section. The fuel volute incorporates two discharge ports to supply fuel to the respective inlets of the thrust chamber fuel inlet manifold.

1-33. Three major seals are contained in the fuel pump section: No. 5, No. 6, and No. 7 seals. No. 5 seal (primary fuel seal) is a carbon-nose-to-mate-ring seal, which seals the shaft area of the balance cavity. Any leakage past this seal, along with any leakage past the No. 4 seal, is directed to the fuel drain manifold by the primary fuel seal drain lines. No. 6 seal (fuel inlet seal) is a carbon-nose-to-mate-ring seal and seals against leakage from the fuel inlet. Any leakage past this seal is directed to the fuel drain manifold by the fuel inlet seal drain lines.

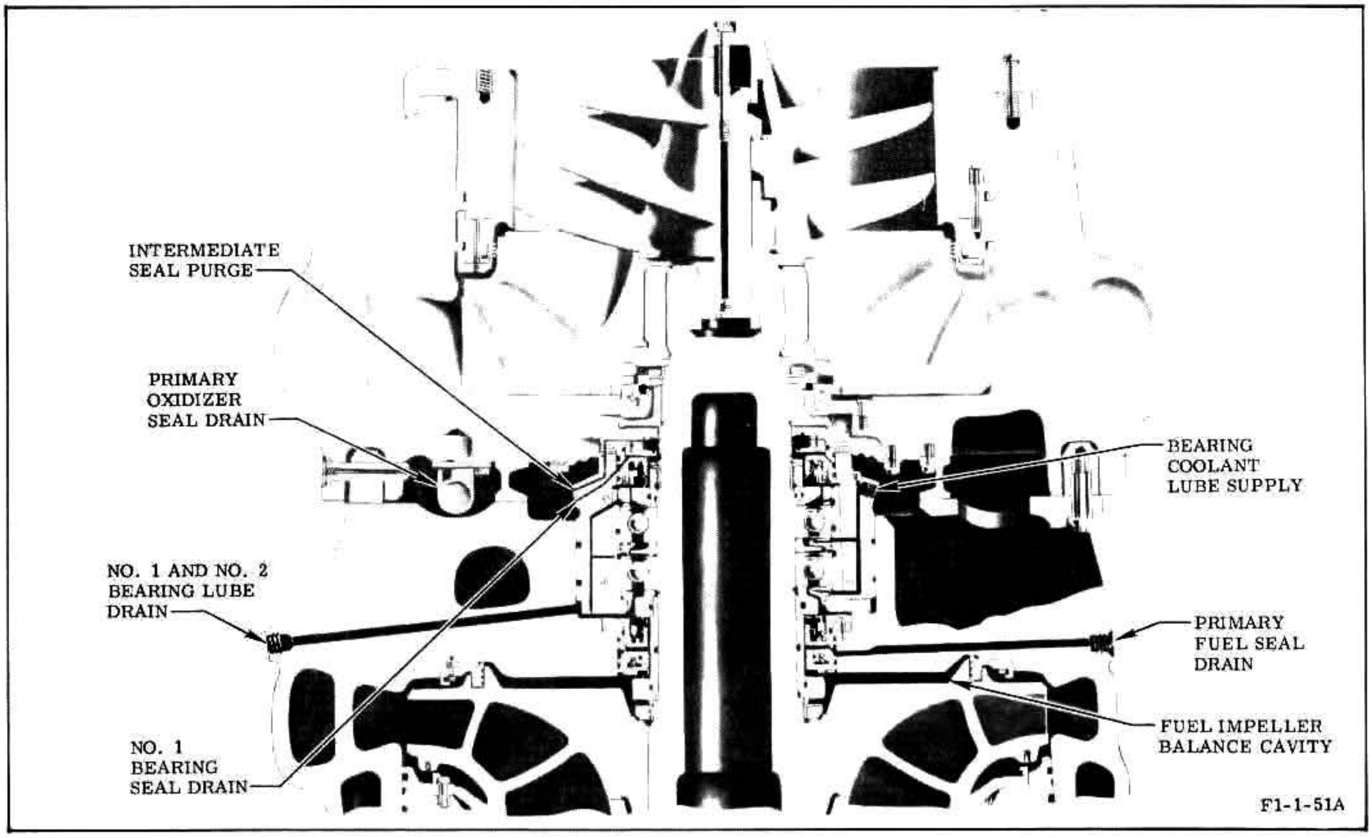

Figure 1-17. Oxidizer Pump and Fuel Pump

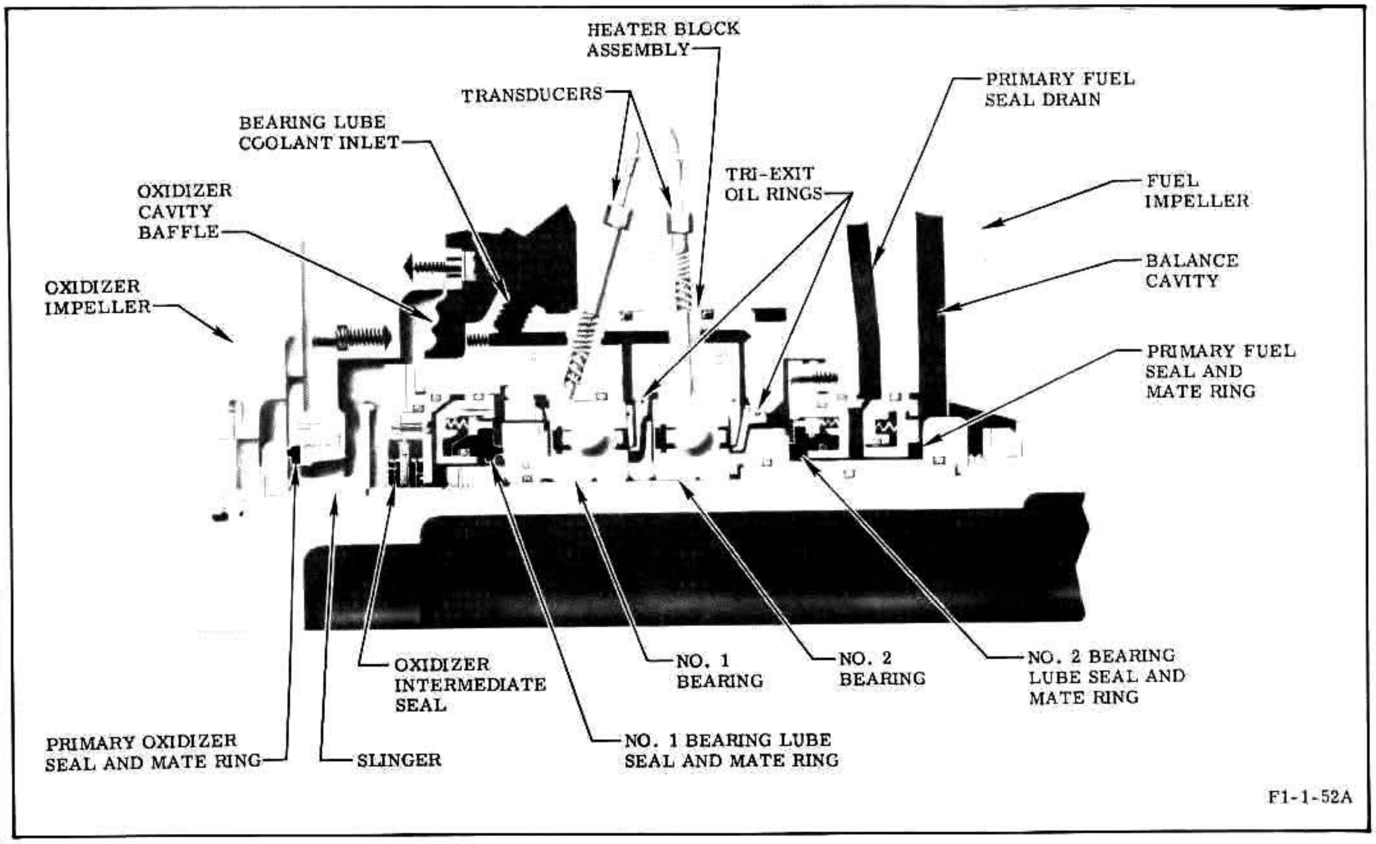

Figure 1-18. Oxidizer Pump and Fuel Pump Bearings

1-34. No. 7 seal (fuel lube seal) is a carbon-nose-to-mate-ring seal and prevents leakage of coolant fuel from the bearing support area. Any leakage past No. 7 seal would be directed to the fuel drain manifold, along with any leakage past the No. 6 seal, by the fuel inlet seal drain lines. Additional seals of the fuel pump section include three synthetic rubber O-rings and two lead-plated brass wear rings. Two of the synthetic O-rings seal the interface of the fuel inlet skirt and wall of the volute. The other O-ring seals the interface of the torque gear housing and fuel inlet. One of the wear rings, which is a labyrinth-type seal bolted to the fuel inlet assembly, effectively seals the high-pressure side of the pump from the low-pressure side by placing a series of orifices and expansion areas between the two sides. The other wear ring, which is bolted to the volute and extends into a groove in the backside of the impeller, is a labyrinth-type seal and, in conjunction with the primary fuel seal, establishes the outer and inner diameters of the fuel balance cavity.

1-35. TURBOPUMP TURBINE DESCRIPTION. The principal parts of the turbine section are the turbine inlet manifold, two turbine wheels, one bearing, and the necessary seals to contain the hot gas within the turbine section. (See figure 1-19.) The turbine inlet manifold houses the component parts of the turbine section and incorporates six spools to provide the structural interface between the turbine section and the fuel pump section. Each spool has an individually matched clevis fitting, which bolts to the fuel pump inlet, and a clevis pin, which are identified with the manifold serial number and a dash number corresponding to the spool position to which they are matched.

1-36. The turbine manifold incorporates an inlet flange to which the gas generator combustor is attached and an outlet flange for the attachment of the heat exchanger. A nozzle assembly welded to the inlet manifold directs the gas generator gases onto the blades of the first-stage turbine wheel, and 10 nozzle segments bolted to the inlet manifold direct gases from the first-stage turbine onto the blades of the second-stage turbine wheel.

1-37. Each turbine wheel consists of a disc incorporating a series of fir tree slots in its outer periphery into which blades are inserted and riveted in place. The first-stage wheel is bolted to and interfaces with the main shaft through curvic coupling that absorbs the high shear loads experienced during engine start. The second-stage wheel is bolted to the first-stage wheel through a dual curvic coupler spacer. The bearing in the turbine section is identified as the No. 3 bearing and is a roller bearing that supports the main shaft at the turbine end and absorbs radial loads imposed on the shaft. The bearing is supported by the turbine bearing support assembly, which is bolted to the torque gear housing and the turbine inlet manifold assembly.

1-38. Two major seals are contained in the turbine section: No. 8 and No. 9 seals. No. 8 seal (hot-gas secondary seal) and No. 9 seal (hot-gas primary seal) are both carbon segmented seals with the spring-loaded segments riding against the pump shaft. The seals isolate the turbine section hot gases from the No. 3 bearing. Other seals in the turbine section consist of two pressure-actuated seals and a honeycomb seal. One of the pressure-actuated seals, which is installed at the interface of the hot-gas secondary seal housing and the bearing support assembly, seals against leakage of coolant fluid into the turbine inlet manifold. The other pressure-actuated seal, which is installed at the interface of the bearing support assembly and the turbine inlet manifold assembly, seals against leakage of hot gas from the turbine inlet manifold. The honeycomb seal is an Inconel honeycomb circular strip positioned on the inner wall of the turbine inlet manifold at the area of the first-stage turbine wheel. The seal in conjunction with two machine serrations on the turbine wheel blades is a labyrinth-type seal that effectively prevents the bypassing of gas around the periphery of the wheel.

1-39. BEARING COOLANT CONTROL VALVE DESCRIPTION. The bearing coolant control valve (figure 1-20) controls the coolant fuel flow to the turbopump bearings and provides a means of supplying preservative compound to the bearings. It is a normally closed, spring-loaded, pressure-actuated poppet valve, embodying redundancy to assure positive delivery of coolant fluid. The valve assembly consists of two coolant and one preservative-oil poppet valves, three 40-micron filters, a restrictor to meter the coolant fuel, and a housing that incorporates a quick-disconnect for attaching the preservative-oil supply line. The redundant fuel coolant poppets offseat when fuel pump discharge pressure reaches a nominal 225 psig and directs the

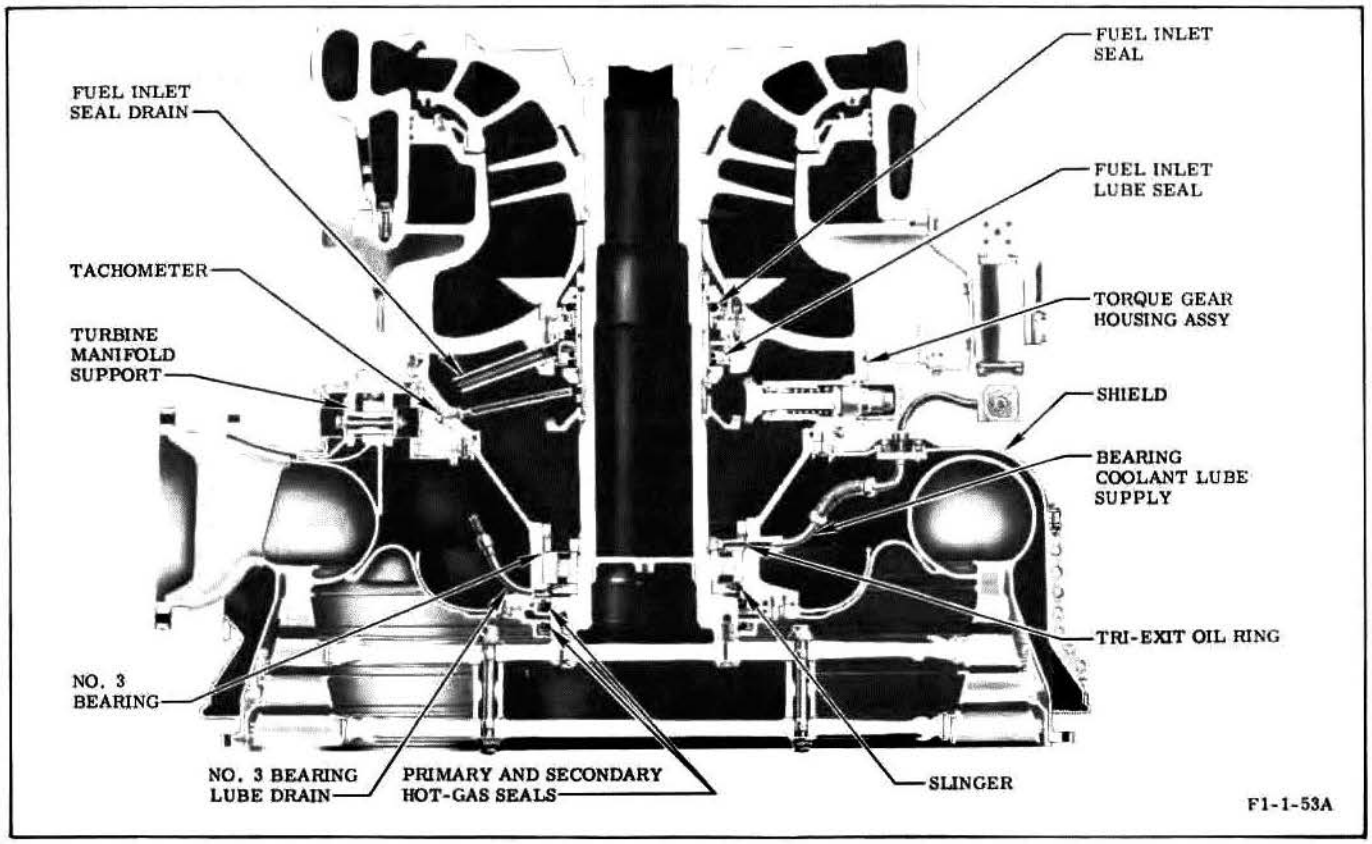

Figure 1-19. Fuel Pump and Turbine

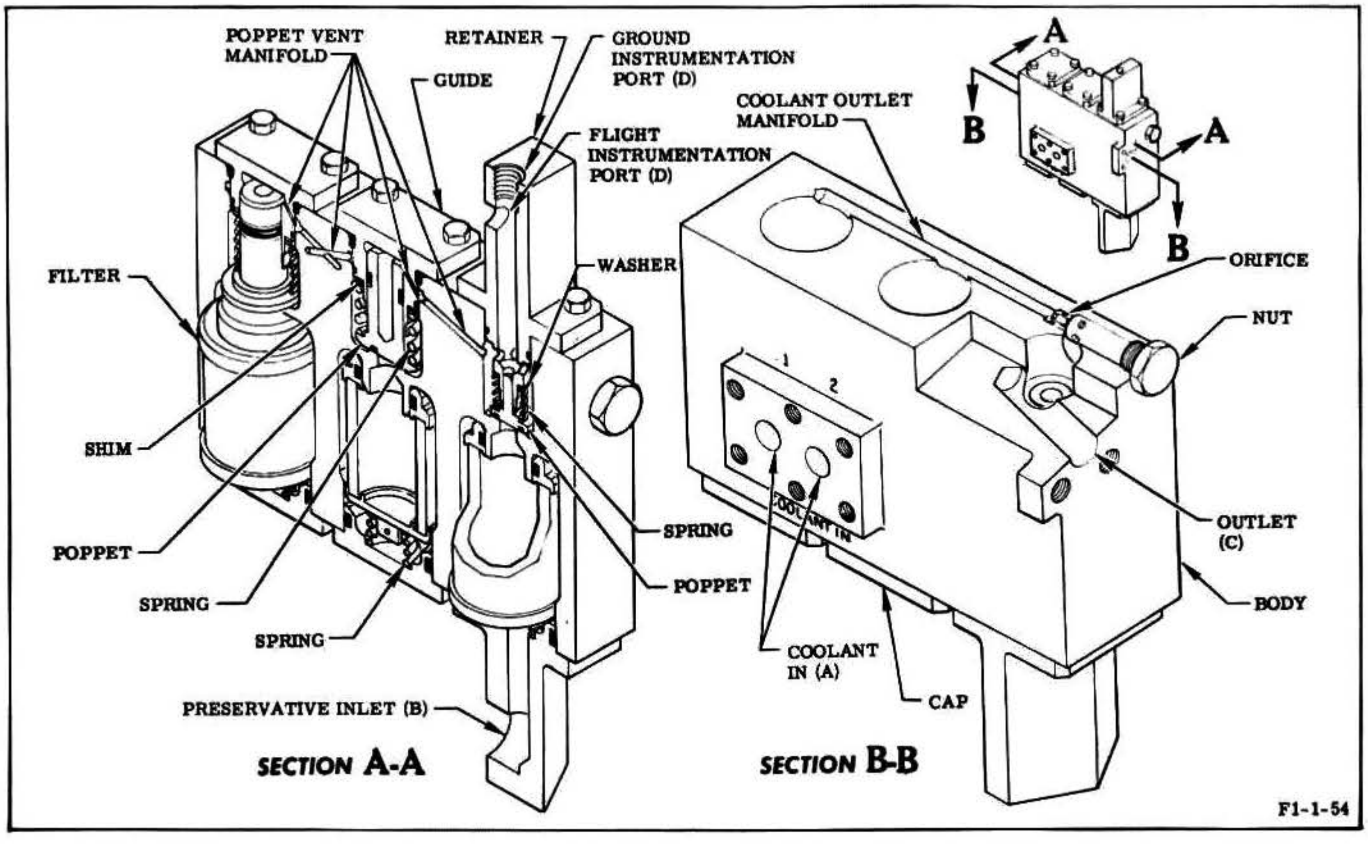

Figure 1-20. Bearing Coolant Control Valve

coolant through the restrictor to the turbopump bearings. The restrictor is sized during engine acceptance testing to provide a bearing pressure of 200-540 psig. The preservative-oil poppet offseats during preservation procedures at 9-20 psig and directs the preservative oil to the turbopump bearings. On engines incorporating MD145 change, the port for the turbine bearing jet ring is capped and the orifice is changed to accommodate the series lube system.

1-40. TURBOPUMP FUEL INLET ELBOW DESCRIPTION. The turbopump fuel inlet elbows No. 1 and No. 2) are single-inlet, dual-outlet elbows incorporating internal flow vanes. Fuel flows radially into the fuel pump inlet assembly from the two inlet elbows mounted 180 degrees apart. Lifting studs are provided on the elbows for ease of handling. Seal monitoring ports are provided on the downstream outlet flanges. One attach point for support of the engine interface panel is located on each elbow, and attach points are located on the duct side of the elbow for fastening a flexible (rubber) thermal insulation boot around the blow to the engine interface panel. The No. 2 elbow has a flanged attach point for the checkout valve engine return hose.

1-41. OXIDIZER VALVE DESCRIPTION.

1-42. The engine has two identical oxidizer valves (figure 1-21) that direct the flow of liquid oxygen to the thrust chamber and the flow of hydraulic control opening fluid to the gas generator control valve. The oxidizer valves are hydraulically actuated, spring-loaded closed, pressure-balanced, fail-to-the-run position, poppet-type valves having quick response and low delta-P operating characteristics. An integral part of each oxidizer valve, and mechanically opened by this valve, is a normally closed sequence valve which, in the open position, directs hydraulic control fluid to the opening port of the gas generator control valve.

1-43. The oxidizer valve is designed so that when it is in the open position, at rated engine oxidizer pressure and flowrate, it will not close if hydraulic control fluid opening pressure is lost. The oxidizer valve consists of a housing that contains the oxidizer inlet and outlet ports and the seat for the poppet seal; a poppet with a machined Teflon seal secured by a seal retainer; a cover that attaches to the valve housing and contains the two poppet-closing springs and also serves as a mount for the cylinder and a guide for the piston rod; a cylinder, within which the actuating piston operates, that contains the open and closed actuator ports and supports the position indicator drive shaft; a cylinder head that contains the inlet and outlet ports of the sequence valve and also provides a mount for the sequence valve gate; and a tapered piston rod that connects the actuator to the poppet, mechanically opens the sequence valve, and actuates the position indicator.

1-44. The sequence valve is a spring-loaded gate valve that seats against, and is hinged to, the oxidizer valve cylinder head. The sequence valve is offseated by the piston rod to direct opening hydraulic control fluid to the gas generator control valve when the oxidizer valve reaches 16.4 percent of its open position. The position indicator consists of a rotary-motion variable resistor and open and closed position switches. The position indicator is mounted on the oxidizer valve cylinder and is coupled to the indicator drive shaft, which is mechanically linked to the piston rod. The position switch provides relay logic in the engine electrical control circuit, and the variable resistor provides instrumentation for recording valve poppet movement.

1-45. Each oxidizer valve incorporates an oxidizer dome purge check valve to admit gaseous nitrogen downstream of the valve poppet to purge the thrust chamber oxidizer dome. The check valve is a gate-type valve, spring loaded to the closed position, and allows flow in one direction when the differential pressure across the valve exceeds 5.0 psi. Five types of seals are used in the oxidizer valve: machined Teflon seals, Mylar lip seals, Teflon-coated steel Naflex seals, and Buna-N O-rings. Oxidizer valve parameters are listed in figure 1-22.

1-46. FUEL VALVE DESCRIPTION.

1-47. The engine has two identical fuel valves (figure 1-23) to direct fuel to the thrust chamber. The valves are hydraulically operated, spring-loaded-closed, pressure-balanced, fail-to-the-run-position, poppet-type valves having quick

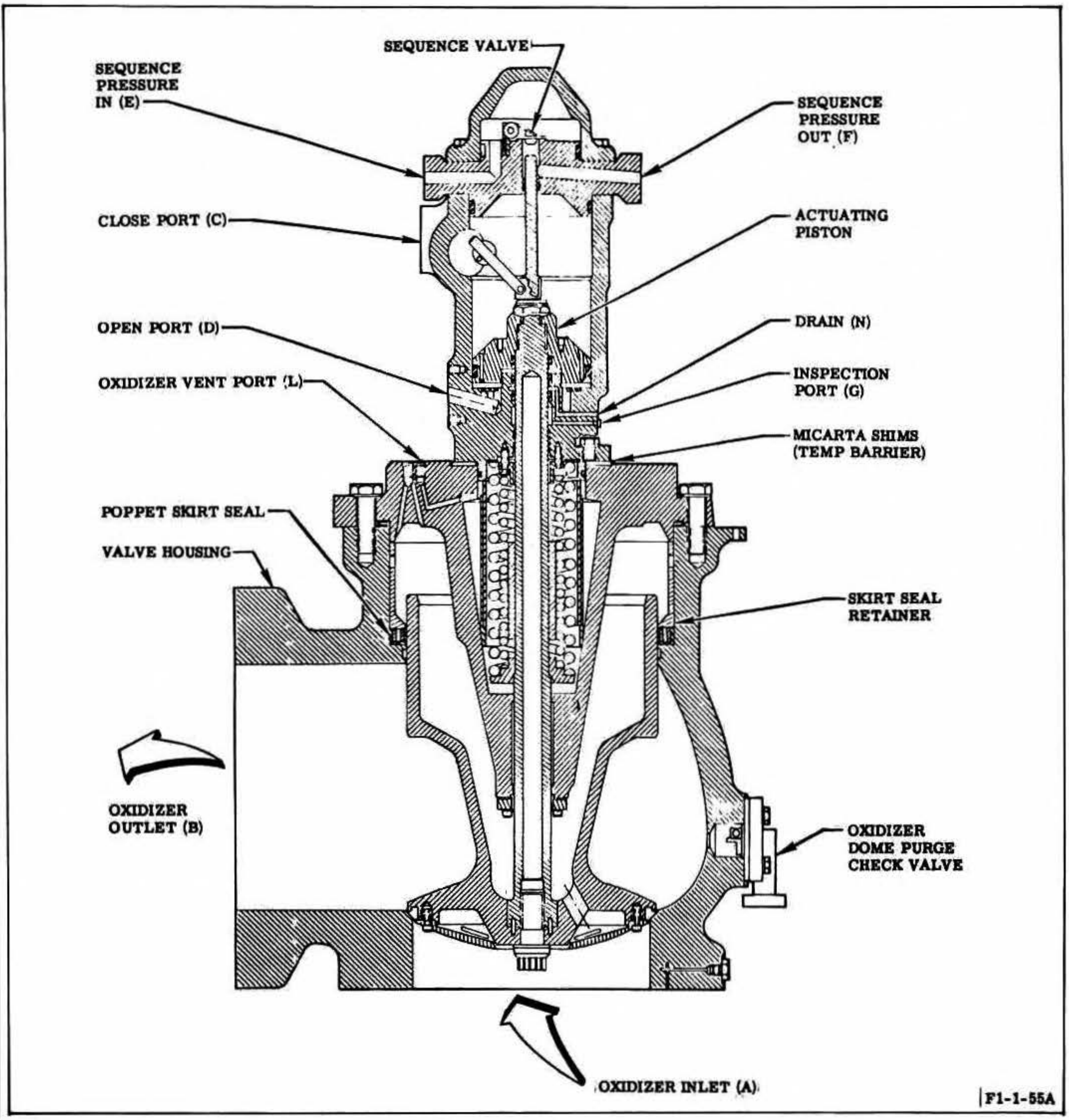

Figure 1-21. Oxidizer Valve

response and low delta-P operating characteristics. The fuel valve is designed so that when it is in the open position, at rated engine fuel pressure and flowrate, it will not close if hydraulic control fluid opening pressure is lost.

1-48. The fuel valve consists of a housing containing fuel inlet and outlet ports, closing and opening ports, a drain port, a purge port, a poppet seal seat and retainer, a spring-loaded poppet with a machined Teflon seal secured by a seal retainer, an actuator guide internally drilled to provide the open port passage, and a piston that connects to the poppet. The nose seal retainer incorporates 12 radially drilled passages to direct fuel into the balance cavity during the last portion of valve closing travel. This feature assists the valve in closing by maintaining a positive fluid pressure within the balance cavity. A position indicator attaches to the valve housing and recesses into the piston shaft. The indicator consists of a linear-motion variable resistor and open and closed position switches. The position switches provide relay logic in the engine electrical control circuit, and the variable resistor provides instrumentation for recording valve poppet movement. Three types of seals are used in the fuel valve: machined Teflon seals, Viton-A O-rings, and Buna-N O-rings. Fuel valve parameters are listed in figure 1-22.

Parameter	Oxidizer Valve	Fuel Valve
Weight	168.0 pounds	90.0 pounds
Length	30.0 inches	16.0 inches
Width	17.25 inches	11.0 inches
Opening pressure	200 psig maximum	110 psig maximum
Closing pressure	75 psig maximum	0 psig (spring only)
Opening time (switch times)	320 milliseconds	635 milliseconds
Closing time (switch times)	325 milliseconds	930 milliseconds
Inlet diameter	8.0 inches	6.0 inches
Outlet diameter	8.0 inches	6.0 inches
Poppet travel	2.34 inches	2.0 inches
Poppet seal	Teflon	Teflon

Figure 1-22. Nominal Oxidizer Valve and Fuel Valve Parameters

1-49. OXIDIZER HIGH-PRESSURE DUCT DESCRIPTION.

1-50. The oxidizer high-pressure ducts contain and distribute the oxidizer separately to each of the oxidizer valves and also provide support for the forward end of the turbopump. The ducts are constructed of drawn aluminum tubing, bent in a continuous section. This design provides flexibility to compensate for expansion, contraction, and vibration. Each duct requires a custom spacer at each end. These spacers are machined for a particular engine and are not interchangeable. On engines incorporating MD137 change, the custom spacers are replaced with selective spacers machined to various dash number sizes. A tap-off flange for the gas generator oxidizer duct is provided on the No. 2 oxidizer high-pressure duct.

1-51. FUEL HIGH-PRESSURE DUCT DESCRIPTION.

1-52. The fuel high-pressure ducts contain and distribute the fuel separately to each of the fuel valves and support the forward end of the turbopump. The construction and design of the fuel ducts provide flexibility to compensate for expansion, contraction, and vibration. Each duct requires a custom spacer at each end. On engines incorporating MD137 change, the custom spacers are replaced by selective spacers with various dash number sizes. Tap-offs for the bearing coolant control valve, gimbal filter manifold, igniter fuel valve, and fuel high-pressure duct drain quick-disconnect are provided on the No. 1 fuel high-pressure duct. Tap-offs for the gas generator fuel duct, engine control valve, No. 2 fuel bleed and fuel high-pressure duct drain quick-disconnect are provided on the No. 2 fuel high-pressure duct.

1-53. ENGINE INTERFACE PANEL DESCRIPTION.

1-54. The engine interface panel (figure 1-24) is mounted above the turbopump oxidizer and fuel inlets. The panel contains the customer connect locations for electrical connectors between the engine and the vehicle. The panel also provides an attach point for thermal insulation attach brackets.

1-55. IGNITION SYSTEM DESCRIPTION.

1-56. The engine ignition system supplies heat energy to initiate combustion in the gas generator combustor, thrust chamber nozzle extension, and the thrust chamber. Five igniters are required for each engine start: two pyrotechnic igniters for the gas generator, two pyrotechnic igniters for the thrust chamber nozzle extension, and a hypergol igniter for the thrust chamber. The pyrotechnic igniters are electrically fired by 500 vac. The pyrotechnic igniters initiate combustion of the fuel and oxidizer in the gas generator and reignite the fuel-rich gas generator exhaust gas in the nozzle

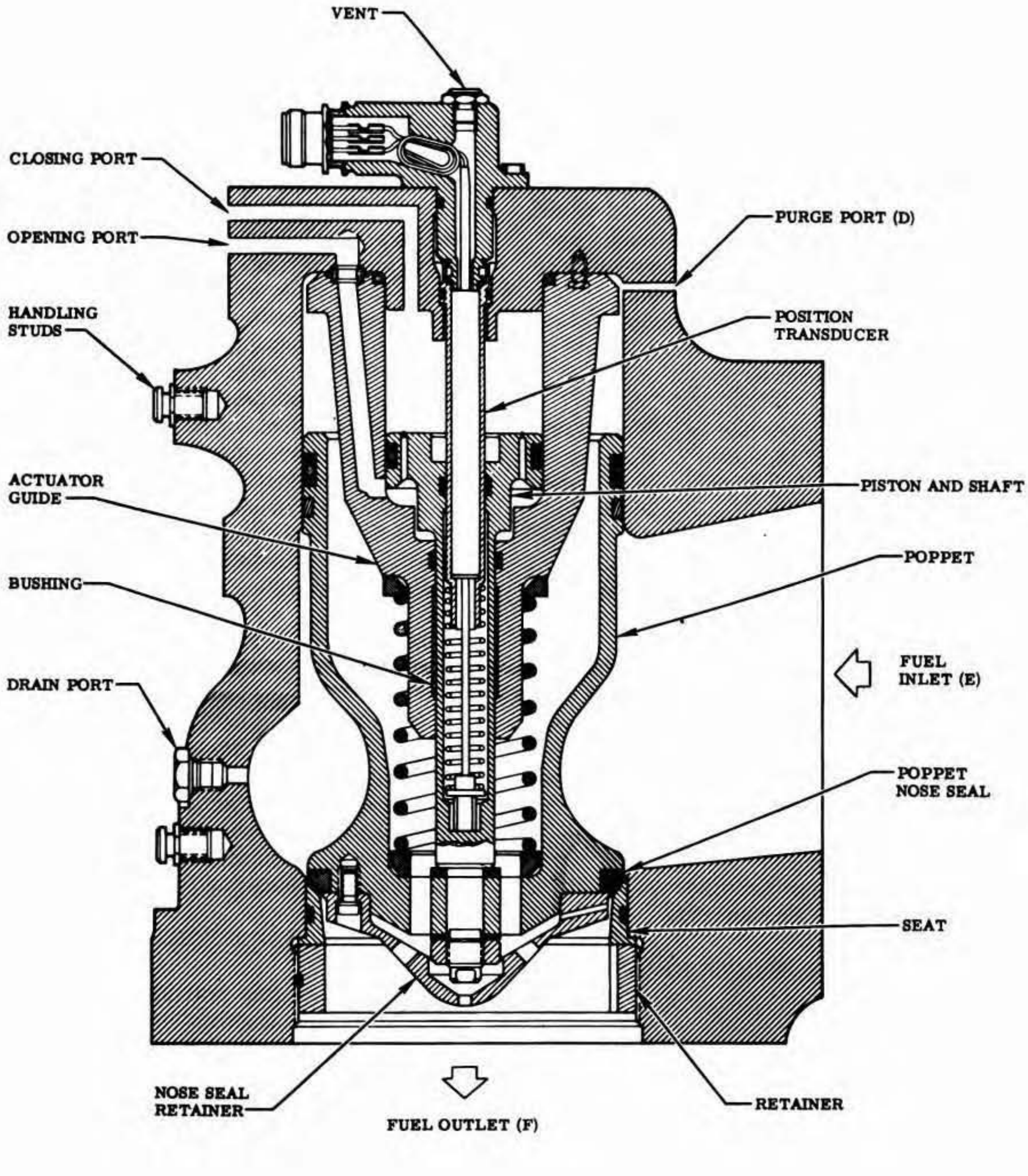

Figure 1-23. Fuel Valve

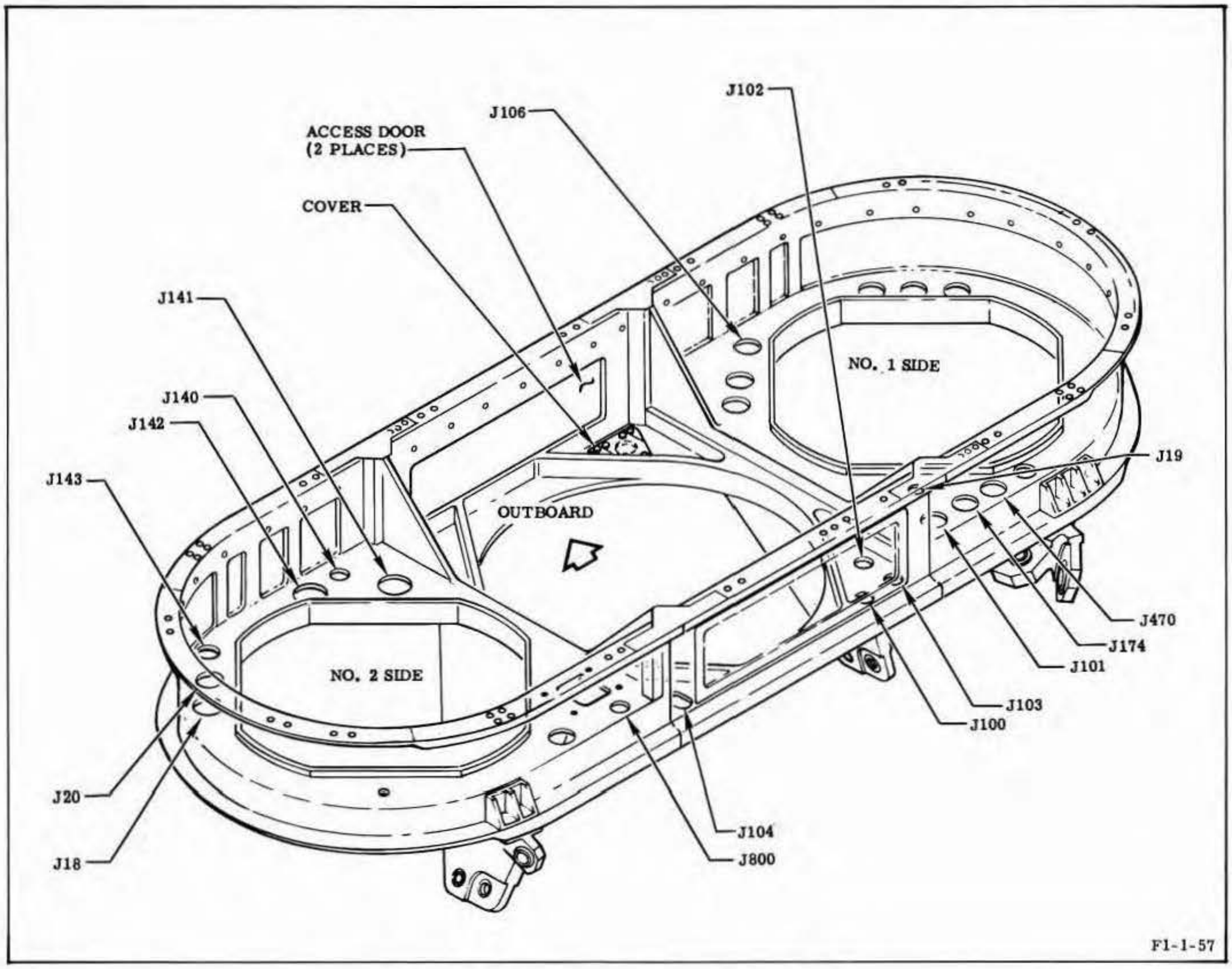

Figure 1-24. Engine Interface Panel

extension. The hypergol igniter initiates combusion in the thrust chamber when fuel pressure from the No. 1 fuel high-pressure duct ruptures the hypergol igniter diaphragms and forces pyrophoric fluid into the thrust chamber through the igniter fuel orifices in the injector.

1-57. HYPERGOL IGNITER DESCRIPTION.

1-58. The hypergol igniter (figure 1-25) contains the pyrophoric fluid that produces initial combustion in the thrust chamber. The igniter is installed in the hypergol manifold by a threaded cap secured by a lockpin. The igniter consists of a cartridge, a plug, a cap, and related seals. The cartridge contains 403 ±10 grams of pyrophoric fluid consisting of 85 percent triethylborane and 15 percent triethylaluminum. Two burst diaphragms are welded to the cartridge, one at each end, to contain the pyrophoric fluid within the cartridge. The burst diaphragm at the cap end of the igniter is identified as the downstream diaphragm and has a burst pressure of 350 (+25, -75) psig. The upstream diaphragm has a burst pressure of 500 (+25, -75) psig. The hypergol igniter is approximately 18 inches in length and 2-3/8 inches in diameter.

1-59. PYROTECHNIC IGNITER DESCRIPTION.

1-60. The pyrotechnic high-voltage igniters (figure 1-26) initiate combustion in the gas generator and reignite the fuel-rich turbine exhaust

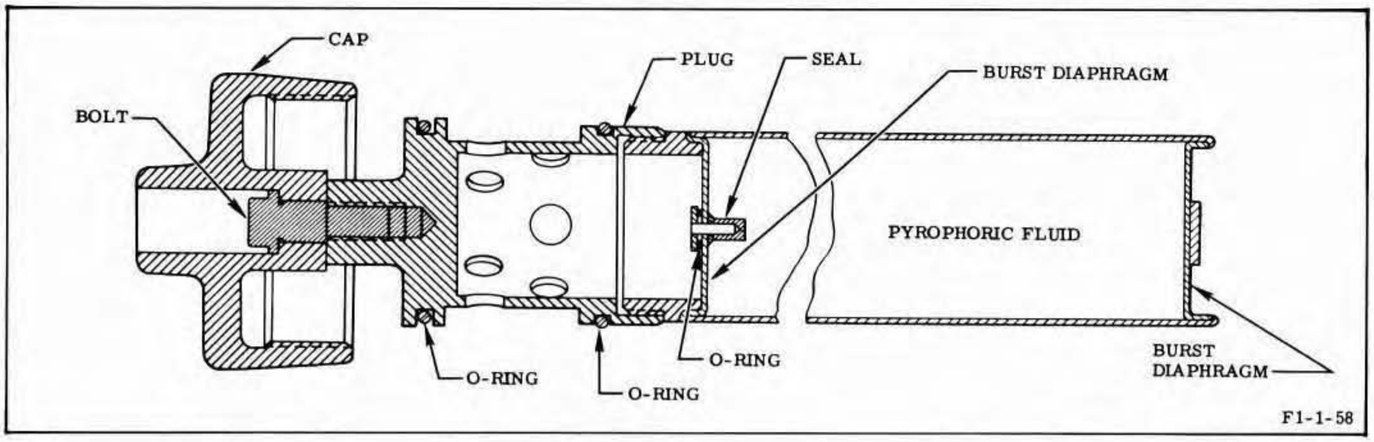

Figure 1-25. Hypergol Igniter

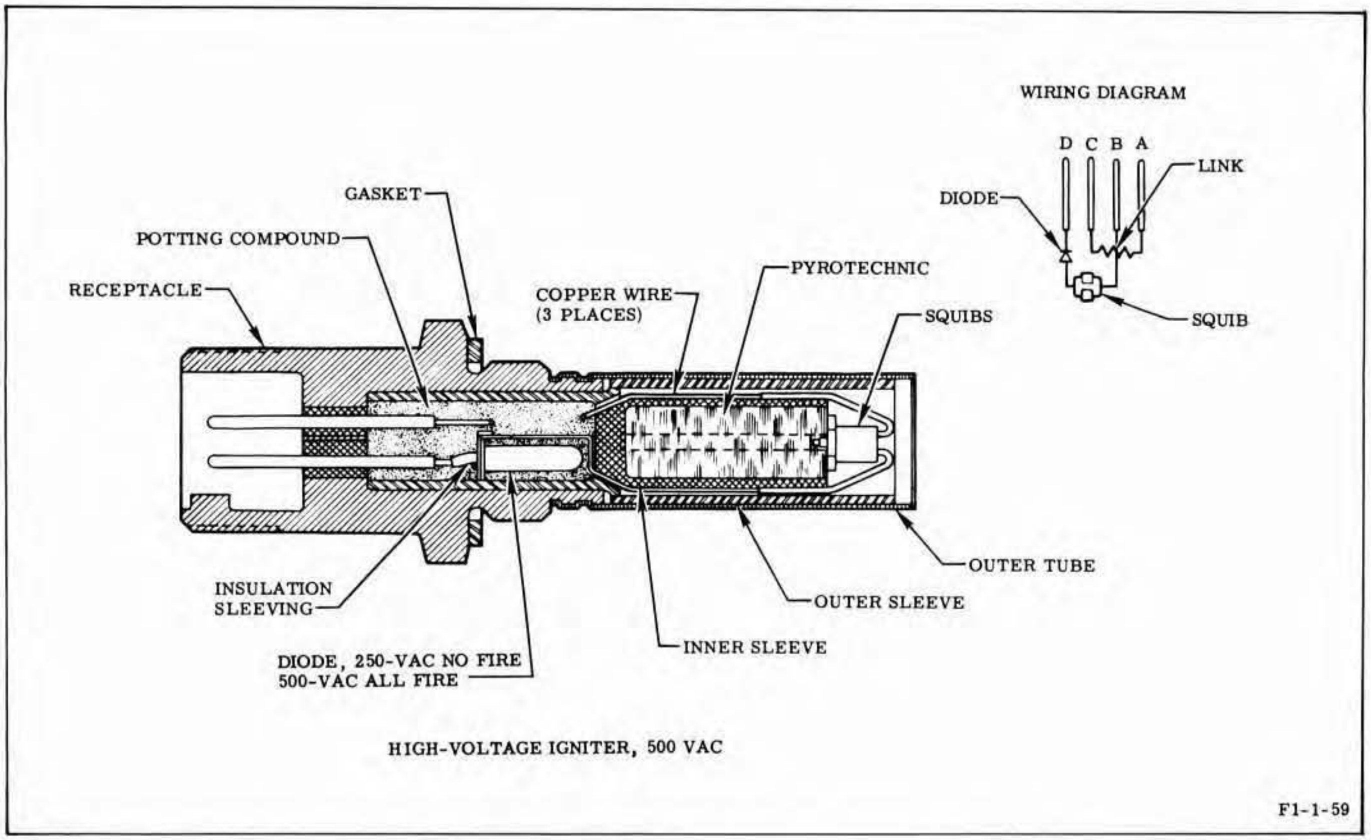

Figure 1-26. Pyrotechnic Igniter

gas in the nozzle extension. Two igniters are installed in igniter bosses of the gas generator combustor inlet flange, and two igniters are installed in bosses in the nozzle extension near the 11:1 expansion ratio area. The igniter external structure consists of a metal tube crimped and soldered at one end into a receptacle with four electrical contact pins. The opposite end of the tube is sealed with a disc of silver alloy foil. Internally, the igniter has two plastic sleeves, a dual-element squib assembly, a main pyrotechnic charge, a diode, and the wire required to connect the two igniter circuits to the four receptacle pins. When an electrical stimulus of 500 vac is impressed on the igniter circuit (BD), the diode is triggered allowing a nominal 4.5 amperes of current to flow and ignite the squib. The flame and hot particles from the squib ignite the main pyrotechnic charge. The burning of the main charge severs the link wire imbedded in the charge within 200-800 milliseconds and continues burning for 6.5 to 9.5 seconds. Severing of the igniter link wire provides a positive signal to the engine electrical control system that the igniter has functioned satisfactorily. When 250 vac or less is impressed on the squib circuit, the diode prevents current flow and the igniter will not fire.

1-61. GAS GENERATING SYSTEM DESCRIPTION.

1-62. The gas generating system provides the internal power required to operate the engine. Utilizing tank-head energy from the vehicle, the gas generating system develops sufficient power to start the engine and changes to its rated power level of operation by using a portion of its own output (bootstrapping). The internal power is generated by tapping propellants from the high-pressure ducts and directing them to the gas generator where hot gas is produced to power the turbopump. After impacting the two-stage turbine, the gas is further utilized by a heat exchanger where additional heat is extracted to condition the gases used for vehicle tank pressurization. The now relatively cool gas generator exhaust gas is directed into the lower section of the thrust chamber to provide film cooling of the double-wall portion of the nozzle. Orifices in the propellant ducts to the gas generator control the power level of the system to provide a constant mass flowrate to the thrust chamber, thereby insuring a constant thrust output. Gas generator parameters are listed in figure 1-27.

1-63. GAS GENERATOR DESCRIPTION.

1-64. The gas generator (figure 1-28) is within a basic envelope 18 by 24 by 28 inches and weighs approximately 220 pounds. The gas generator consists of a dual ball valve, an injector fuel inlet housing tee, an integral oxidizer dome and injector, and a combustor. Six types of seals are used in the gas generator: silver-plated stainless-steel Naflex and K-seals and copper crush washers for hot-gas applications, Teflon-coated steel K-seals for cryogenic applications, and Buna-N O-rings for fuel applications.

Combustor temperature	1,453° F
Injector end pressure	980 psia
Oxidizer flowrate	49 lb/sec
Fuel flowrate	118 lb/sec
Mixture ratio	0.416:1.0
Combustor pressure drop	33.5 psia
Injector pressure drop (oxidizer)	250 psia
Injector pressure drop (fuel)	145 psia
Gas generator ball valve pressure drop (oxidizer)	55 psia
Gas generator ball valve pressure drop (fuel)	200 psia
Orifice pressure drop (oxidizer)	261 psia
Orifice pressure drop (fuel)	375 psia
Line pressure drop (oxidizer)	76 psia
Line pressure drop (fuel)	43 psia
Gas generator ball valve open time (switch to switch)	170 milliseconds
Gas generator ball valve closed (switch to switch)	90 milliseconds

Figure 1-27. Nominal Gas Generator Parameters

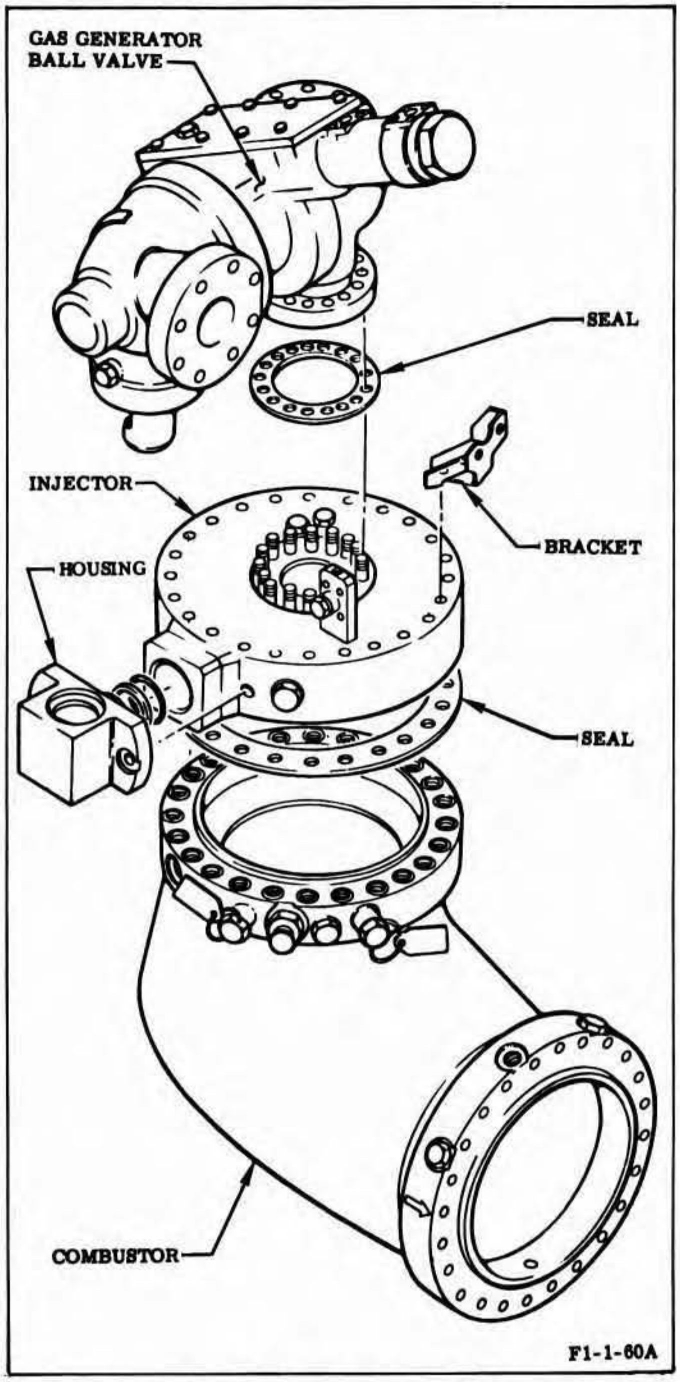

Figure 1-28. Gas Generator

1-65. GAS GENERATOR BALL VALVE DESCRIPTION. The gas generator ball valve (figure 1-29) is a hydraulically operated valve incorporating two hollow balls connected to a single actuator for directing propellants into the gas generator injector. The balls are shells on shafts, each shell having an inlet and outlet flow passage. The inlet and outlet flow passages are located diametrically opposite each other in the oxidizer ball and 150 degrees apart in the fuel ball. A tube is welded between the inlet and outlet passages in the fuel ball to reduce flow resistance. Both balls seat against bellows-type seals. The fuel bellows seal incorporates a deflection elbow for the fuel outlet that is contoured to reduce pressure drop in the gas generator fuel system. Both ball shafts rotate on roller bearings, and each ball also rotates against the actuator housing on roller bearings and races.

1-66. The gas generator ball valve contains a linear-motion position switch and an integral electrical connector, mounted in the valve cover. The housing cover contains tapped holes for installation of Stage Contractor thermocouples. The cover is used to seal the switch compartment. The ball valve oxidizer outlet attaches directly to the gas generator injector oxidizer inlet. The gas generator fuel inlet housing tee connects the ball valve outlet to the injector fuel inlet. The gas generator ball valve opening is directed by sequence valves on the oxidizer valves. Hydraulic fluid recirculates through a warmant passage in the fuel ball housing, preventing the fuel in the fuel ball housing from freezing, and through a passage in the piston between the opening port and the closing port, preventing air entrapment and hydraulic fluid freezing. Four types of seals are used in the gas generator ball valve: machined KEL-F seals, KEL-F lip seals, Buna-N O-rings, and a Teflon-coated steel Naflex seal.

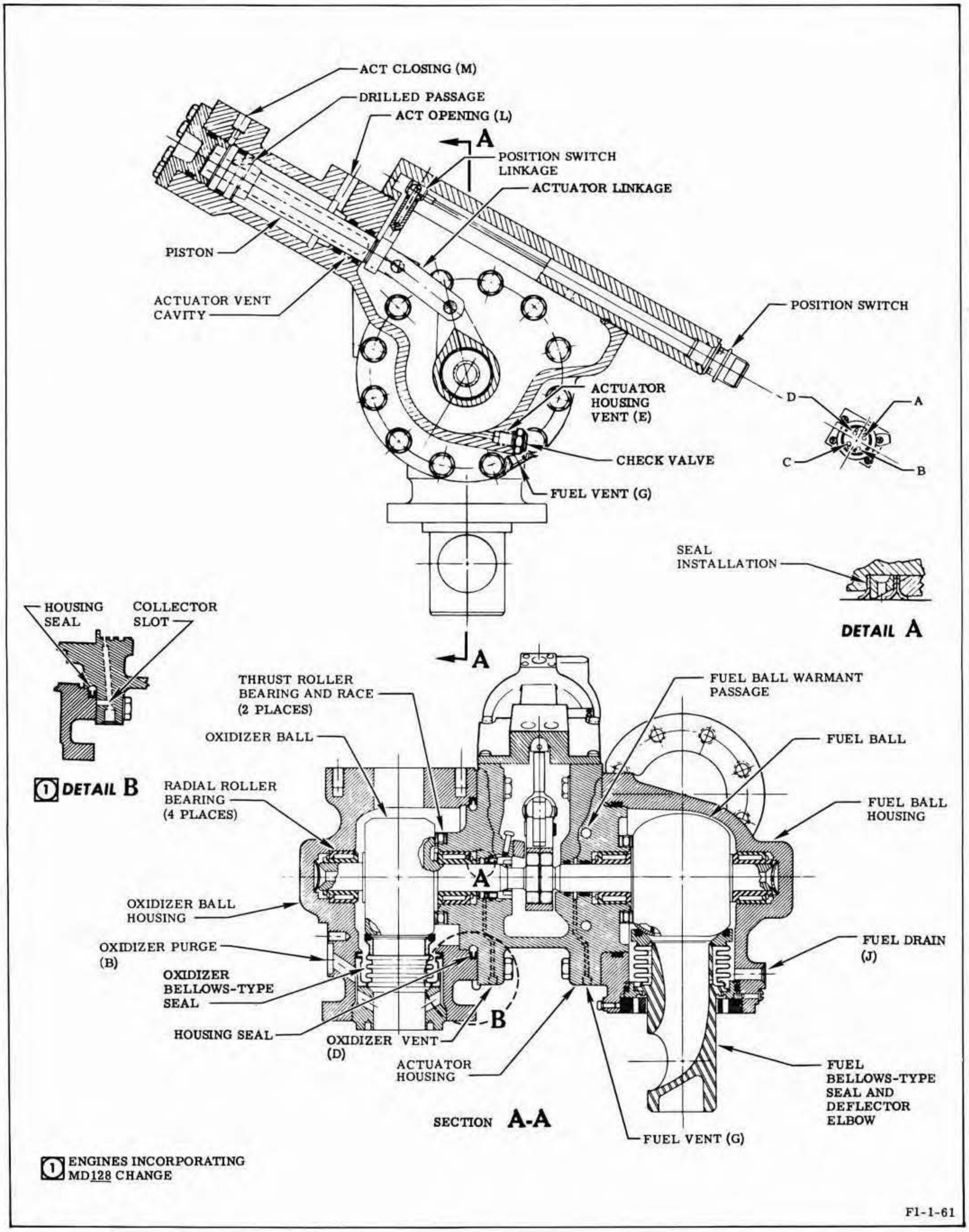

Figure 1-29. Gas Generator Ball Valve

1-67. GAS GENERATOR INJECTOR DESCRIPTION. The gas generator injector (figure 1-30) is a flat-faced, multi-orificed-type injector incorporating a dome, a plate, a ring manifold, five oxidizer rings, five fuel rings, and a fuel disk. The injector is mounted on the combustor, and the gas generator ball valve and the gas generator fuel inlet housing tee are mounted on the injector. The injector directs fuel and oxidizer into the gas generator combustor. Fuel enters the injector through the gas generator fuel inlet housing tee from the gas generator ball valve. The fuel is directed through radial passages in the plate and injected into the combustor through orifices in the five fuel rings and the fuel disk. Oxidizer enters the injector through the oxidizer inlet manifold from the gas generator ball valve. The oxidizer is directed from the oxidizer manifold through internal passages in the plate and is injected into the combustor through the orifices in the five oxidizer rings. The injector uses a double-orificed pattern in which the fuel and oxidizer rings are drilled in a pattern and angle so that the stream from one oxidizer orifice will impinge upon the stream from another oxidizer orifice, and the stream from a fuel orifice will impinge upon the stream from another fuel orifice. Orifices in the outer fuel ring also provide a cooling film of fuel for the combustor choke ring wall.

1-68. GAS GENERATOR COMBUSTOR DESCRIPTION. The gas generator combustor (figure 1-30) is a welded single-walled manifold connecting the gas generator injector and the turbine inlet. The combustor contains a chamber for burning propellants and for exhausting the gases from the burning propellants into the turbopump turbine manifold. The combustor is thermally insulated by a sheet metal shell that bolts around the combustor body. The inlet flange is the attach point for the injector and dome assembly and incorporates a 45-degree lip section that deflects the flame pattern to the bottom section of the combustor. Also incorporated in the inlet flange are the two bosses (45 degrees apart) for pyrotechnic igniter installation and two ports (150 degrees apart) to monitor gas pressure at this point. A port to measure or vent seal leakage past the seal between the injector and combustor is also located on the combustor inlet flange. The combustor outlet flange, which is the attach point for the turbine manifold, incorporates two ports (90 degrees apart) to monitor gas pressure and one port to vent or measure seal leakage past the seal at this interface. Combustor wall temperatures are held to safe operating limits by the combination of film coolant provided by the outer fuel ring of the injector, and the fuel-rich mixture ratio with which the gas generator operates.

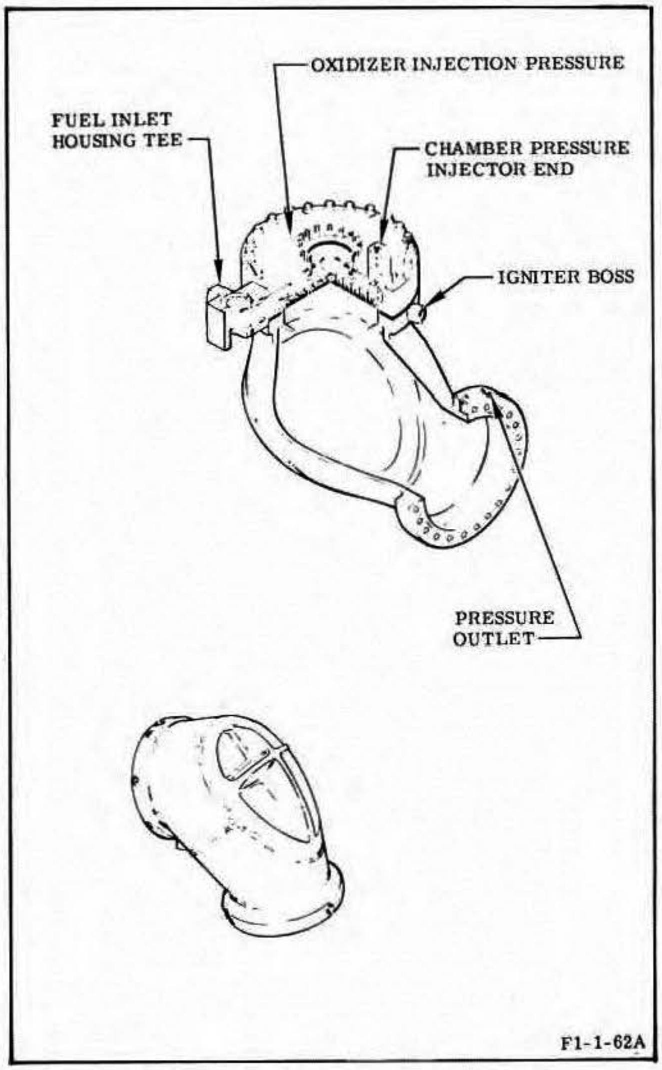

Figure 1-30. Gas Generator Injector and Combustor

1-69. GAS GENERATOR OXIDIZER DUCT DESCRIPTION. The gas generator oxidizer duct contains and distributes the oxidizer from the No. 2 turbopump oxidizer outlet duct to the gas generator ball valve oxidizer inlet. The gas generator oxidizer duct is a two-piece, 1-1/2 inch ID duct incorporating three bellows-connected gimbal joints to allow flexing to accommodate installation tolerances and thermal expansion or contraction of the duct. The gas generator oxidizer duct incorporates two orifices for oxidizer flowrate calibration. One orifice is installed at the interface of the gas generator oxidizer duct and the No. 2 turbopump oxidizer outlet duct,and the other orifice is installed at the interface of the two gas generator oxidizer duct sections. Both orifices are sized at engine acceptance test. A fluid scoop, which extends into the fluid stream of the No. 2 turbopump oxidizer outlet duct, is installed at the interface of the gas generator oxidizer duct and the No. 2 turbopump oxidizer outlet duct.

1-70. GAS GENERATOR FUEL DUCT DESCRIPTION. The gas generator fuel duct contains and distributes the fuel from the No. 2 turbopump fuel outlet duct to the gas generator ball valve fuel inlet. The gas generator fuel duct is a one-piece, 2-1/4 inch ID duct incorporating three bellows-connected gimbal joints to allow flexing to accommodate installation tolerances, thermal expansion, and contraction of the duct. The gas generator fuel duct incorporates an orifice for fuel flowrate calibration. The orifice is installed at the interface of the gas generator fuel duct and the No. 2 turbopump fuel outlet duct. The orifice is sized during the engine acceptance test. A flow deflector is installed at the interface of the gas generator fuel duct and the gas generator ball valve fuel inlet.

1-71. HEAT EXCHANGER DESCRIPTION.

1-72. The heat exchanger (figure 1-31) is within a basic envelope 43 inches in diameter and 58 inches in length, with the diameter varying from 40 inches at the turbine outlet to 24 inches at the turbine exhaust manifold. Hot gases from the turbine are directed to the heat exchanger where a portion of the heat is transferred to the oxidizer and helium coils. In the heat transfer, oxidizer in the coils is converted to GOX for vehicle oxidizer tank pressurization, and the chilled helium in the coils is expanded for vehicle fuel tank pressurization. The upper section of the heat exchanger encloses the helium coils and mounting flanges for the helium and oxidizer supply and return lines. Each mounting flange is provided with ports to measure seal leakage. The supply ports incorporate orifices to control the flow of oxidizer or helium through the coils. The lower section of the heat exchanger encloses the oxidizer coils and contains a bellows assembly to compensate for thermal expansion during engine operation. Tubular structural members, clamped to the coils and welded to brackets incorporated in the heat exchanger body, secure and restrain the oxidizer coils. Heat exchanger connections at the turbine outlet manifold and the thrust chamber exhaust manifold are sealed by pressure-actuated Naflex seals.

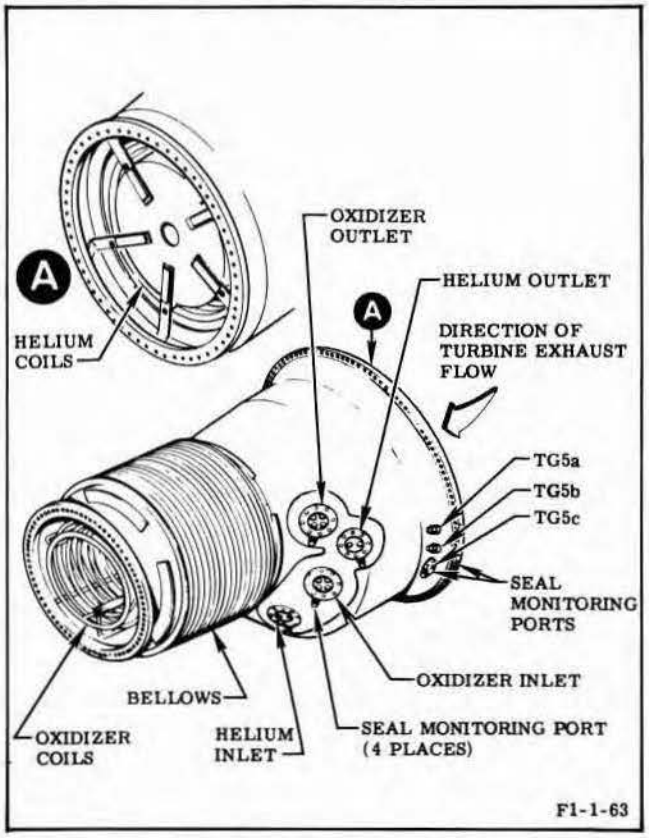

Figure 1-31. Heat Exchanger

1-73. ENGINE CONTROL SYSTEM DESCRIPTION.

1-74. The engine control system regulates the total engine operation. To provide this regulation, the engine control system directs, governs, and sequences the activity of engine propellant valves during the start, transition, mainstage, and cutoff phases of engine operation. Major components of the engine control system are the engine control valve, redundant shutdown valve, checkout valve, and hypergol manifold assembly. Orifices in the engine control system control propellant valves timing.

1-75. ENGINE CONTROL VALVE DESCRIPTION.

1-76. The engine control valve (figure 1-32) directs hydraulic fluid to open and close the propellant valves and the gas generator ball valve. The valve is electrically controlled and hydraulically actuated, with an internal hydraulic lockup that maintains actuation when the start signal is removed. The valve includes an override piston to deactuate the valve in case of stop solenoid failure. The assembly consists of a control section and a filter manifold section.

1-77. The control section consists of two solenoid-operated pilot (start and stop) valves, two slaved poppet valves, a matched selector spool and sleeve, a stop actuator, an override piston, and a valve body. The solenoid-operated pilot valves are identical except the start solenoid electrical connector has two pins and the stop solenoid has three pins to prevent improper connection. To ensure that the engine cannot be started with the stop solenoid disconnected, the negative lead of the start solenoid is wired in series with the negative lead of the stop solenoid. Each solenoid valve consists of a coil, a double-acting poppet (the armature), and two poppet seats (upstream and downstream). The coil is energized by 24-30 vdc. The poppet is spring loaded against the downstream seat. Each solenoid valve is protected by a 10-micron filter at its inlet passage. A passage in the control valve body directs fluid to a passage that directs fluid to the poppet cavity. Two passages permit fluid flow from the cavity to the slaved pilot valve cylinder when the poppet is deenergized. The downstream seat forms the base of the valve assembly and contains a passage that is closed by the deenergized poppet and opened when the poppet is energized.

1-78. Two slaved pilot valves, each slaved to its respective solenoid pilot valve, direct fluid to shuttle the selector spool. Each slaved pilot valve consists of a poppet, two identical poppet seats, a piston, a cylinder, and a spring. The poppet is a pressure-actuated disc that free-floats between the two poppet seats. Both faces of the poppet are finished to provide a metal-to-metal seal with the poppet seats. The poppet seats, separated by a spacer, are installed face-to-face on both sides of the poppet. At start, momentary off-seating of the poppet from the normal position allows hydraulic pressure to shuttle the selector spool to open. The cylinder houses the piston and spring and is ported to admit hydraulic pressure to the spring cavity when the solenoid pilot valve is deenergized. When the start solenoid is energized, the piston is momentarily actuated through the force transmitted to the piston shaft by the poppet.

1-79. The selector valve is a matched spool and sleeve. The spool, floating inside the sleeve, is a hollow, closed-end cylinder with three ports and two sealing lands. The spool is actuated from its normal spring-loaded position (closed) by fluid pressure by the momentary actuation of the slaved pilot valve at start. Once actuated, the spool is hydraulically locked by fluid pressure from the open port. The sleeve

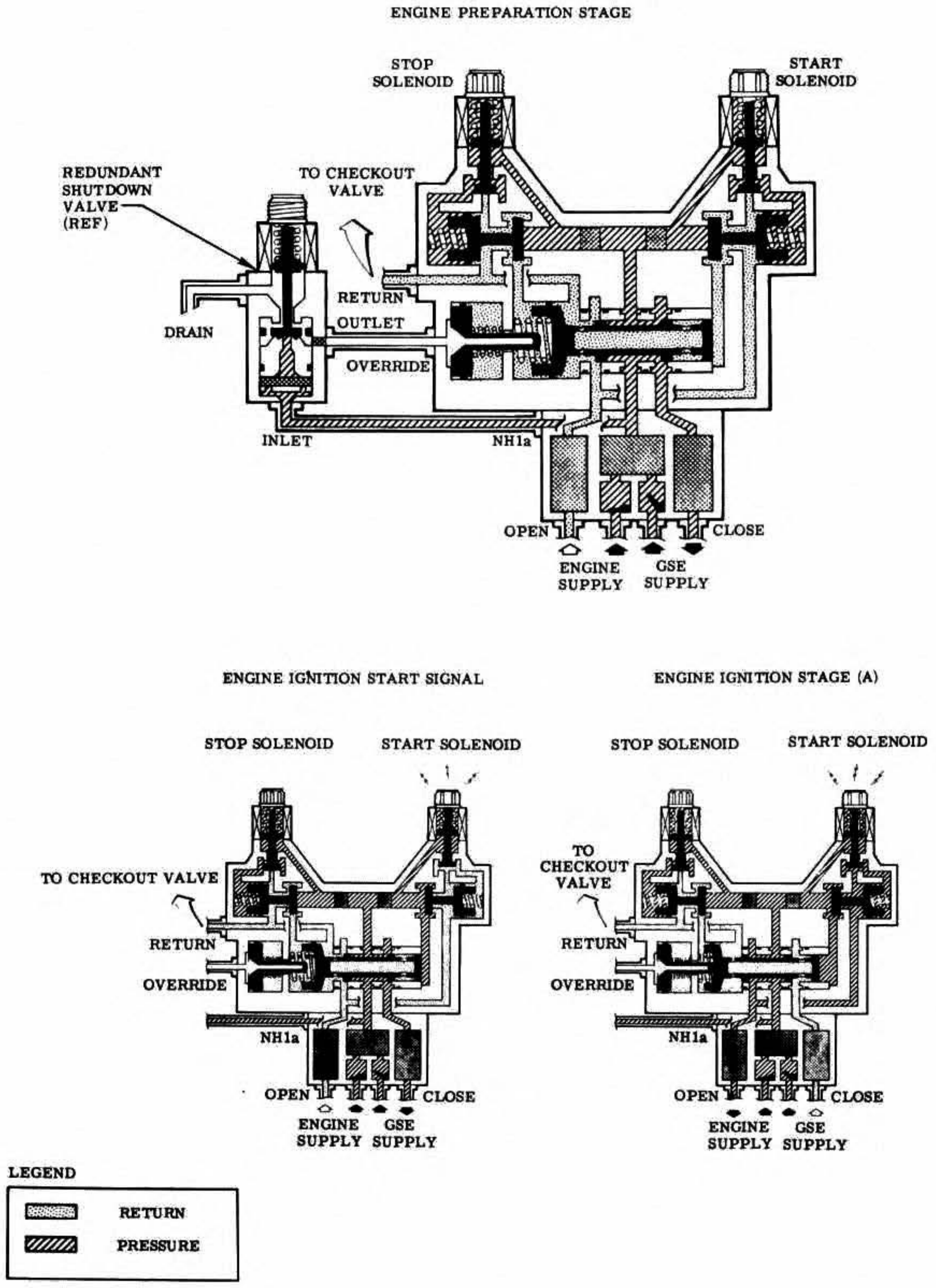

Figure 1-32. Engine Control Valve and Redundant Shutdown Valve Schematic (Sheet 1 of 2)

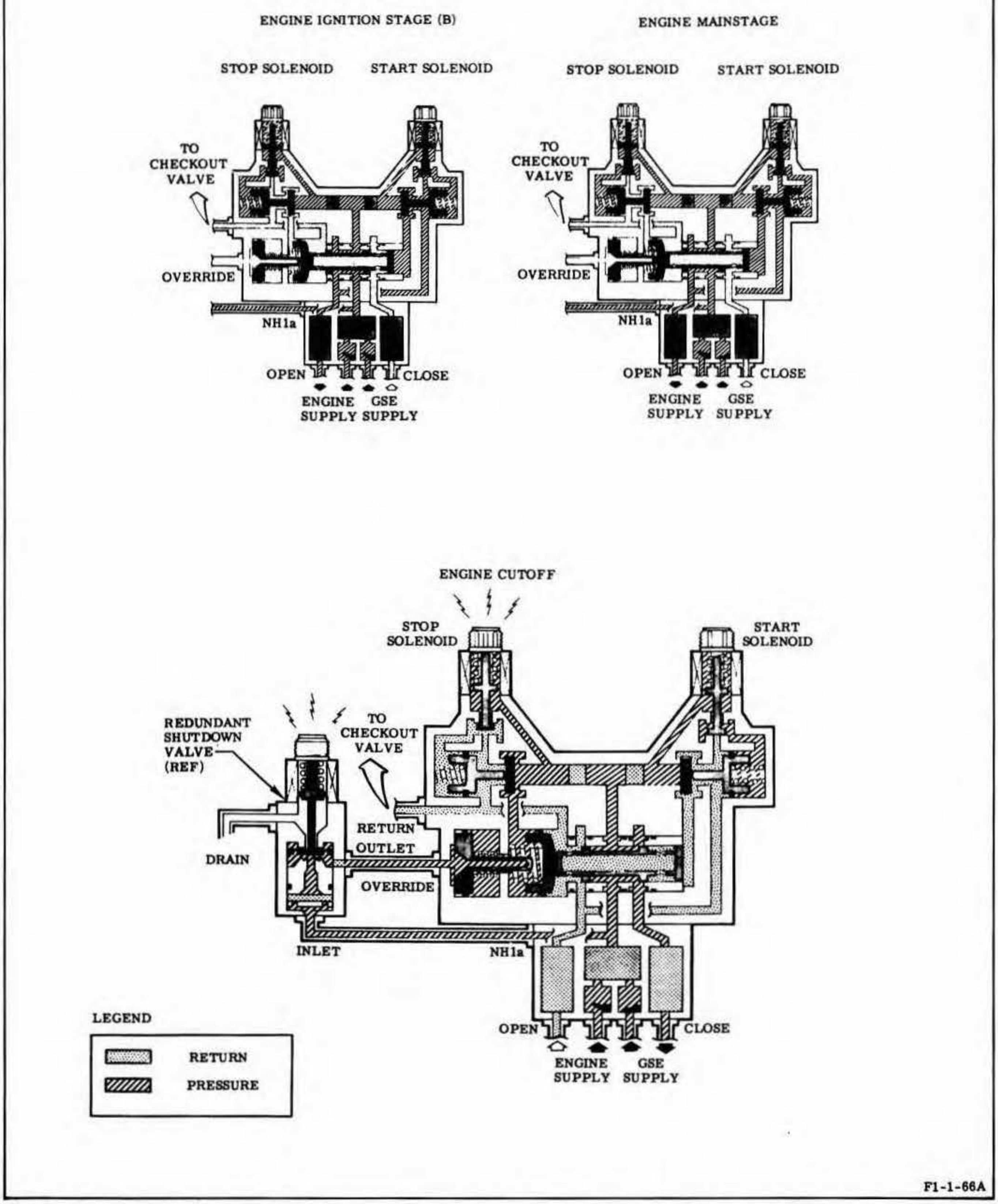

Figure 1-32. Engine Control Valve and Redundant Shutdown Valve Schematic (Sheet 2 of 2)

has three ports that aline with three annular passages in the selector valve cavity. Four O-rings with Teflon backup rings prevent leakage between the annular passages. A threaded retaining cap holds the selector valve in its cavity and provides a mechanical stop for the spool.

1-80. The stop actuator is a spring-loaded, hydraulically actuated piston that positions the selector spool to the closed position. The actuator is normally controlled by the stop slaved pilot valve but can be directly actuated by the override piston in case of stop valve failure. Four holes admit control fluid into the spring cavity from an annular passage supplied from the stop slaved pilot valve. The override piston is hydraulically actuated and mechanically coupled to the stop actuator. The piston is used to position the selector spool in case of stop valve failure. An external pressure source is required to actuate the piston, which mechanically positions the selector spool to the closed position. The piston is held deactuated against a stop by a coil spring. The stop retains the override piston in its cavity and incorporates the override pressure inlet port. The control valve body houses the operational units and bolts to the filter manifold assembly. The interface of valve body and filter assembly is sealed by a seal plate.

1-81. The filter manifold is the supply filtration and distribution point for all control system fluid. The filter manifold consists of two swing-gate check valves, three filters, and a manifold body. The check valves are flange mounted back-to-back in a common supply cavity. One check valve covers the GSE SUPPLY fluid inlet port, and the other check valve covers the ENG SUPPLY fluid inlet port. Three 25-micron wire-mesh filters are installed in the manifold assembly. One filter is in the supply system and one each in the opening and closing passages. The manifold body houses the filters and is bolted to the control valve body. Two threaded ports in the ENGINE/GSE filter supply cavity provide pressure for instrumentation and for the emergency override system. Passages connect the closed, open, and supply filter cavities to corresponding ports of the control section. Three types of seals are used in the engine control valve: Viton-A O-rings for plug and bleeder seals, a Viton-A Gask-O-Seal at the manifold-to-solenoid-valves joint, and Buna-N O-rings for all other applications.

1-82. REDUNDANT SHUTDOWN VALVE DESCRIPTION.

1-83. The redundant shutdown valve (figure 1-33) is a solenoid-operated, normally closed, three-way valve incorporating two 10-micron filters (one disk shaped, the other cylindrical), fixed inlet and vent seats, and a floating poppet that is spring loaded to the closed position against the inlet seat. The function of the valve is to direct hydraulic pressure to the engine control valve override pressure port as a redundant means of effecting engine shutdown in case of failure of the engine control valve stop solenoid, and to provide a drain for the override pressure port during engine checkout and operation. Continuous application of 24-30 vdc is required to keep the valve energized. The energizing signal input is applied simultaneously to the redundant shutdown valve solenoid and the engine control valve stop solenoid at engine cutoff. The redundant shutdown valve body provides an internal threaded DRAIN port and flanged IN and OUT ports. The solenoid electrical connector is a four-pin connector with only three of the pins used. Pin A is used for the positive energizing signal input, pin B for the negative return signal, and pin C for monitoring the signal received at the solenoid. Pins A and D are bussed internally within the connector. The seals used in the redundant shutdown valve are Buna-N O-rings.

1-84. CHECKOUT VALVE DESCRIPTION.

1-85. The checkout valve (figure 1-34) is within a basic envelope 8 by 9 by 14 inches and is located just below the engine control valve on the No. 2 side of the engine thrust chamber jacket. The checkout valve is a motor-driven selector valve that directs engine control return fluid back to the GSE or engine supply source. The checkout valve consists of a ball, a three-port housing, and an actuator. The actuator is a 24-30 vdc reversible motor that incorporates reduction gearing, position switches, and limit switches. The actuator controls the

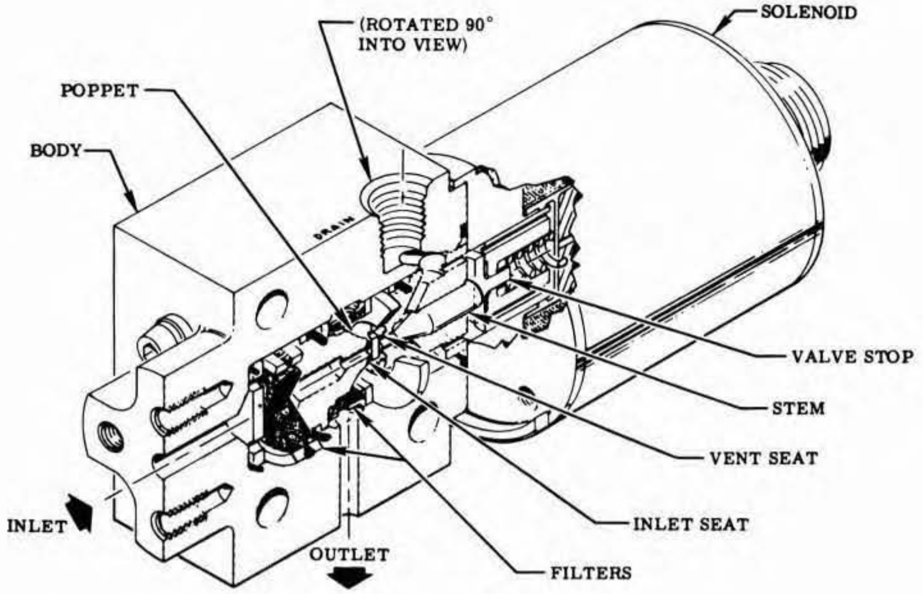

Figure 1-33. Redundant Shutdown Valve

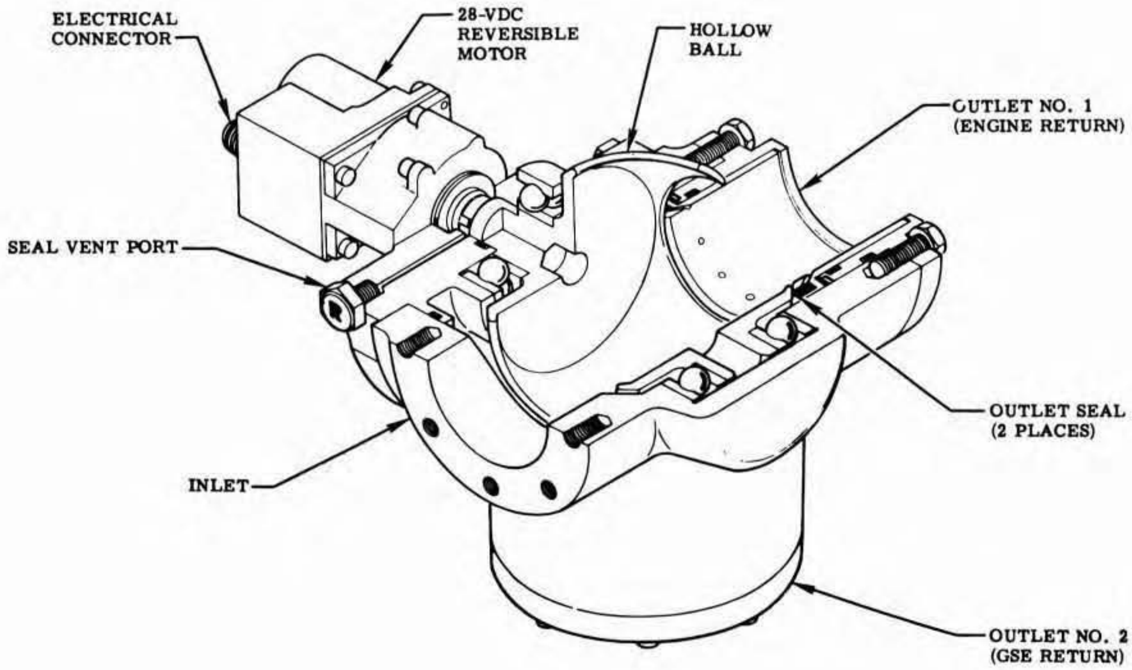

Figure 1-34. Checkout Valve

position of the ball to direct control fluid from the inlet port to one of the outlet ports. During engine checkout or servicing, the checkout valve ball is positioned so that fuel entering the inlet port is directed through the ball and out the GSE return outlet No. 2 port. For engine static firing or flight, the ball is positioned so that fuel entering the inlet port is directed through the ball and out the engine return outlet No. 1 port. Three types of seals are used in the checkout valve: Viton-A O-rings for dynamic applications, Buna-N O-rings for static applications, and machined Teflon seals for the ball seals.

1-86. HYPERGOL MANIFOLD ASSEMBLY DESCRIPTION.

1-87. The hypergol manifold assembly (figure 1-35) sequences engine operation from ignition stage into mainstage. The assembly is attached to a bracket located on the thrust chamber fuel manifold and consists of a hypergol cartridge container, an ignition monitor valve, an igniter fuel valve, and a hypergol installed switch. Only the hypergol cartridge container and hypergol installed switch are replaceable components of the assembly. The hypergol container is a cylindrical manifold into which the hypergol cartridge is installed. The hypergol installed switch is a cam-actuated switch that indicates the installed position of the hypergol cartridge. Hypergol manifold assembly parameters are listed in figure 1-36.

1-88. IGNITION MONITOR VALVE DESCRIPTION. The ignition monitor valve (figure 1-37) directs the opening of the fuel valves and permits the fuel valves to open only after satisfactory ignition has been achieved in the thrust chamber. The ignition monitor valve is a spring-loaded, pressure-actuated, fail-to-the-run, three-way valve mounted on the hypergol manifold and actuated by ignition combustion pressure. A dual-faced, spring-loaded poppet directs valve opening pressure to the fuel valves when ignition combustion pressure, acting on a laminated Mylar diaphragm, shuttles the poppet to the valve's open position. Once shuttled, the valve will remain in the open position until engine shutdown due to the differential pressure across the upstream and downstream faces of the poppets. Teflon Viton-A "slipper" seals and Buna-N O-rings are used in dynamic and static seal applications. An internal orifice between the inlet and outlet ports permits fluid recirculation to bleed air from the control fluid. A mechanical lockup, actuated through a cam-rod that is positioned to cam the follower when an unruptured hypergol cartridge is installed, prevents ignition monitor valve actuation until the hypergol cartridge has ruptured. The atmospheric reference port is vented to the fuel overboard drain system.

1-89. IGNITER FUEL VALVE DESCRIPTION. The igniter fuel valve (figure 1-35) is an integral part of the hypergol manifold assembly. The igniter fuel valve is opened by fuel pressure applied to the FUEL INLET port of the hypergol manifold from the No. 1 fuel outlet duct. When the igniter fuel valve is opened, an internal passage in the manifold directs the fuel from the igniter fuel valve to the hypergol container where the fuel first ruptures the hypergol cartridge diaphragms and then follows the hypergolic fluid into the thrust chamber for ignition. A Teflon O-ring in the nose of the poppet seats against a seat machined into the hypergol manifold body. The desired spring loading is obtained by shimming the spring.

1-90. FLIGHT INSTRUMENTATION SYSTEM DESCRIPTION.

1-91. The flight instrumentation system monitors engine performance during checkout, test, and vehicle flight operations. The system consists of pressure transducers, temperature transducers, position indicators, a flow measuring device, power distribution junction boxes, and associated electrical harnesses. The basic flight instrumentation system is composed of a primary and an auxiliary system. The primary instrumentation system includes parameters critical to all engine static firings and subsequent vehicle launches, the auxiliary system is used during research, development, and acceptance test portions of the engine static-test program and initial vehicle flights.

1-92. Eight types of seals are used in the flight instrumentation system installation: asbestos rubber sheet gaskets for electrical connector application; Viton-A O-rings and Gask-O-Seals for fuel applications; copper crush washers, copper-plated nickel-base Naflex seals, and gold-plated steel K-seals for hot-gas applications; and Teflon-coated steel Naflex and K-seals for cryogenic applications. Refer to section II for detailed joint and seal data.

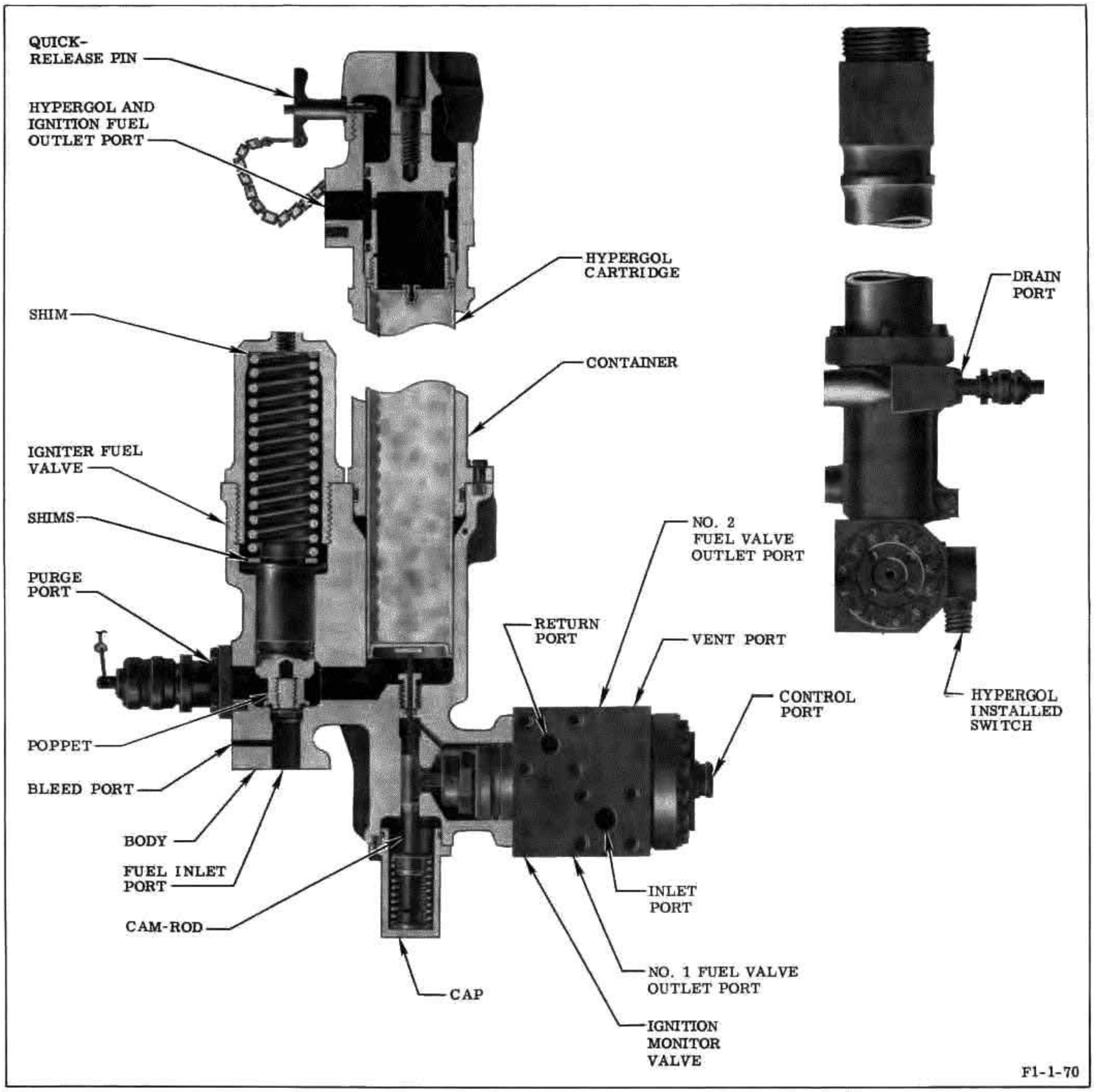

Figure 1-35. Hypergol Manifold

1-93. On engines incorporating MD96 change, transducers, harnesses, and related hardware that make up the auxiliary instrumentation system are removed, with the exception of the heat exchanger oxidizer inlet flowrate measurement transducer. The heat exchanger oxidizer flowmeter and associated electrical harness are retained to maintain heat exchanger calibration capability. The flight instrumentation system parameters, including both the primary and auxiliary systems, are listed in figure 1-38.

IGNITER FUEL VALVE		IGNITION MONITOR VALVE	
Cracking pressure	375 ±30 psig	Actuating pressure	20 ±4 psig
Shimming effect	Each shim changes the cracking pressure 4 psig.	Recirculation flow	0.22 to 0.41 gpm

Figure 1-36. Nominal Hypergol Manifold Parameters

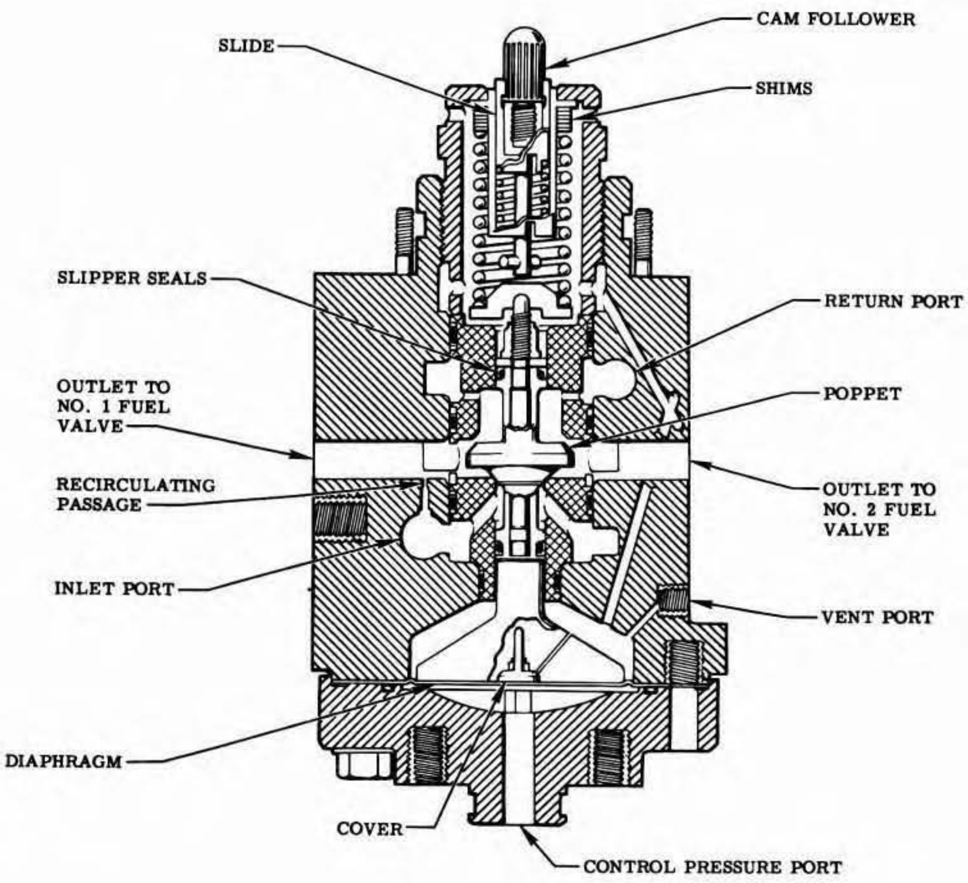

Figure 1-37. Ignition Monitor Valve

Tap No.	Parameter	Range	Accuracy (Percent)
	PRIMARY INSTRUMENTATION		
KF6a-1	Fuel pump inlet No. 1 pressure	0-200 psia	2.0
TG5c	Turbine outlet pressure	0-100 psia	2.0
PF2a-2	Fuel pump discharge No. 2 pressure	0-2,500 psia	2.0
CG1e	Combustion chamber pressure	0-1,500 psia	0.5
GG1d	Gas generator chamber pressure	0-1,500 psia	1.0
PO2a-2	Oxidizer pump discharge No. 2 pressure	0-2,000 psia	2.0
NH5c	Common hydraulic return pressure	0-500 psia	2.0
LB1a	Oxidizer pump bearing jet pressure	0-1,000 psia	2.0
LS1	Oxidizer pump bearing No. 1 temperature	0° to 400° F	2.0
TG4a(a)	Turbine inlet manifold temperature	0° to 2,000° F	2.0
CGT1	Engine environmental temperature	0° to 1,500° F	2.0
F44	Heat exchanger oxidizer inlet flow	20-100 gpm	2.0
	AUXILIARY INSTRUMENTATION(b)		
PO7a	Oxidizer pump seal cavity pressure	0-50 psia	2.0
HH2a	Heat exchanger helium inlet pressure	0-500 psia	2.0
HH3a	Heat exchanger helium outlet pressure	0-500 psia	2.0
PO2a-1	Oxidizer pump discharge No. 1 pressure	0-2,000 psia	2.0
HO1b	Heat exchanger oxidizer inlet pressure	0-2,000 psia	2.0
HO4a	Heat exchanger GOX outlet pressure	0-2,000 psia	2.0
PF2a-1	Fuel pump discharge No. 1 pressure	0-2,500 psia	2.0
NH3a	Engine control opening pressure	0-2,500 psia	2.0
NH2a	Engine control closing pressure	0-2,500 psia	2.0
HO1a	Heat exchanger oxidizer inlet temperature	-300° to -250° F	2.0
HO4b	Heat exchanger GOX outlet temperature	-300° to +600° F	2.0
F16	Heat exchanger oxidizer inlet flow(c)	0-100 gpm	2.0

(a) Engines not incorporating MD176 change

(b) Engines not incorporating MD96 change

(c) On engines incorporating MD96 change, this measurement is retained and relocated to primary system as tap number F44.

Figure 1-38. Flight Instrumentation System Parameters

1-94. PRIMARY AND AUXILIARY JUNCTION BOX DESCRIPTION.

1-95. There are two electrical junction boxes in the flight instrumentation system: the primary junction box located in the primary system and the auxiliary junction box located in the auxiliary system. On engine incorporating MD96 change, the auxiliary junction box is deleted. The junction boxes serve as junction points for signal circuitry of respective transducers either to and from the telemetry and instrumentation system during vehicle flight or to and from the control center during engine static test. The primary junction box (figure 1-39) has provisions for eight electrical connections; the auxiliary junction box (figure 1-40) has provisions for five electrical connections. Both junction boxes are hermetically sealed to prevent possible entry of contaminants and moisture.

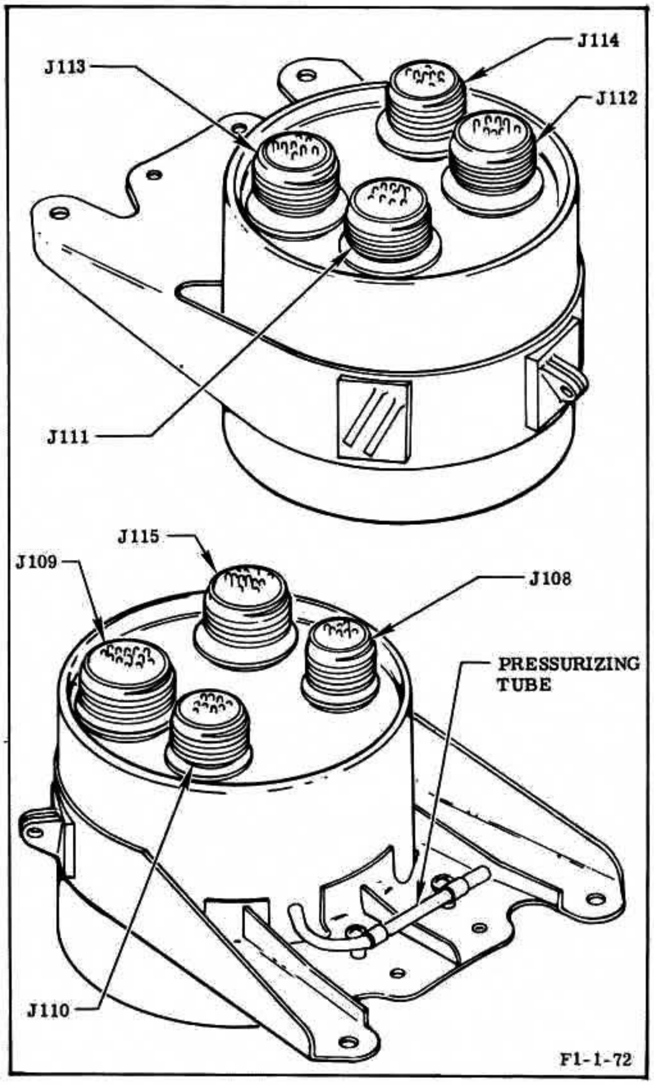

Figure 1-39. Primary Junction Box

1-96. PRESSURE TRANSDUCER DESCRIPTION.

1-97. The flight instrumentation transducer (figure 1-41) is a dc input, dc output, absolute pressure transducer consisting of a mechanical-force summing element coupled to an electrical bridge. The output of the electrical bridge is directly proportional to the pressure applied to the mechanical-force summing network. All four of the bridge elements in the transducer are active. For each bridge element that increases impedance with increasing pressure, a second bridge element decreases impedance with increasing pressure. These elements are connected into the bridge in such a way as to obtain maximum sensitivity from the bridge. The transducer also contains the necessary circuit elements to isolate the output from the input, to provide a regulated bridge excitation voltage, to provide all necessary bridge amplification, to provide bridge output demodulation if required, and to provide all required output filtration so that the transducer can be excited with a nominal 28-vdc input and provide a 5-vdc output at full pressure range. The transducer features the capability of simulating the output at 20 and 80 percent of its operating range. These simulation steps are activated by applying 28 vdc to pins E and F for the 20- and 80-percent points, respectively. The application of this voltage activates a switching circuit

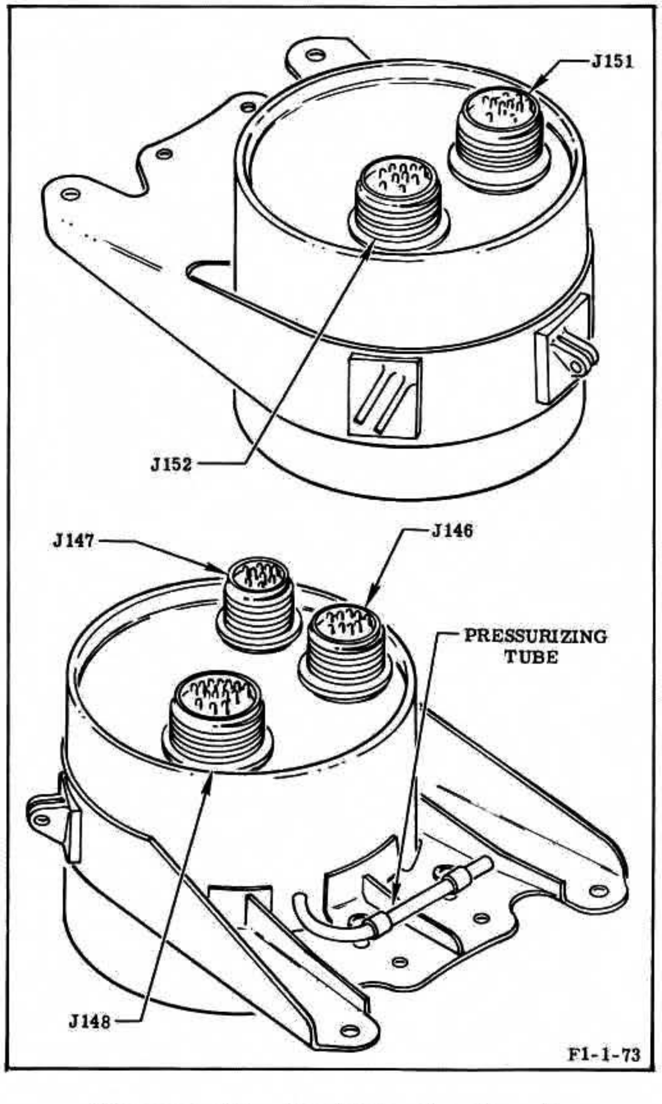

Figure 1-40. Auxiliary Junction Box

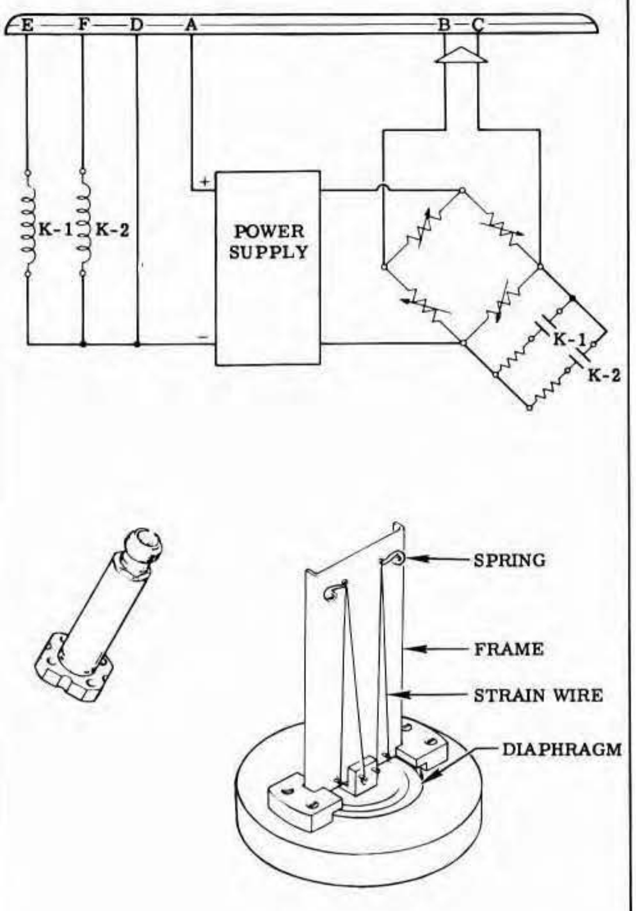

F1-1-74

Figure 1-41. Pressure Transducer

that substitutes a resistor in the bridge network, thereby simulating the bridge output for 20 or 80 percent of the pressure range of the instrument. The transducer uses a six-pin connector with the following pin functions:

a. Pin A, positive excitation (+28 vdc)

b. Pin B, positive output (+5 vdc at full range pressure)

c. Pin C, output return

d. Pin D, excitation return

e. Pin E, 20-percent calibration (+28 vdc)

f. Pin F, 80-percent calibration (+28 vdc)

1-98. TEMPERATURE TRANSDUCER DESCRIPTION.

1-99. The flight instrumentation temperature transducers (figure 1-42) are of the platinum resistance type. All of the resistance bulbs have a three-wire termination that allows a bridge completion with a transmission line in opposite legs of the bridge, thereby making zero and sensitivity changes negligible with respect to variations in line length and resistance. Each transducer is supplied with its own resistance-versus-temperature calibration over a specified range. While all of the transducers operate on the same principle and the electrical connections are identical, the physical configurations of the various transducers differ with the installation and measurement requirements. Engines incorporating MD159 change have an improved cocoon temperature transducer with glass-insulated and resistance-welded lead wires enclosed in a platinum tube and a sensing element protected by a shield.

1-100. OXIDIZER FLOWMETER DESCRIPTION.

1-101. The oxidizer flowmeter (figure 1-43) is a turbine-type, volumetric, liquid-flow transducer mounted between the heat exchanger check valve and the oxidizer inlet line to measure the flow of oxidizer entering the heat exchanger coil. The flowmeter consists of a rotor assembly that senses the oxidizer flow, flow straighteners that direct the flow of oxidizer across the rotor, and two pickup coils. The pickup coils are enclosed, moistureproof units with electrical receptacles. Each coil is electrostatically shielded and potted and contains an auxiliary isolated coil for checkout purposes. The flow of oxidizer through the flowmeter sets the rotor in motion. The angular speed of the rotor is a function of the volumetric flowrate of the oxidizer and is detected by the magnetic pickup that the flux

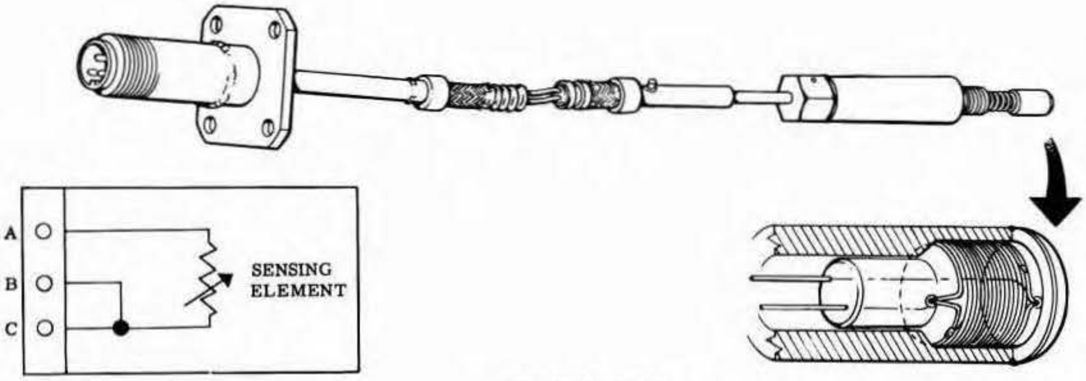

BEARING SERVICE

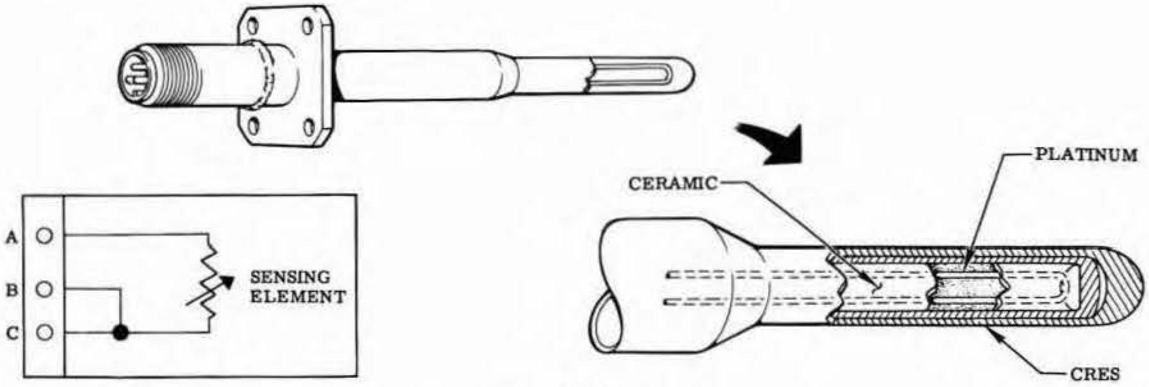

HOT-GAS SERVICE

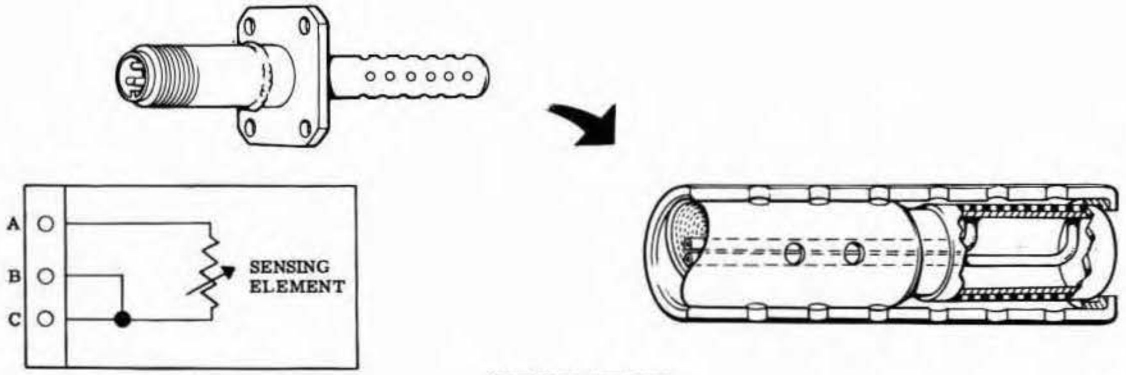

OXIDIZER SERVICE

F1-1-75

Figure 1-42. Temperature Transducers

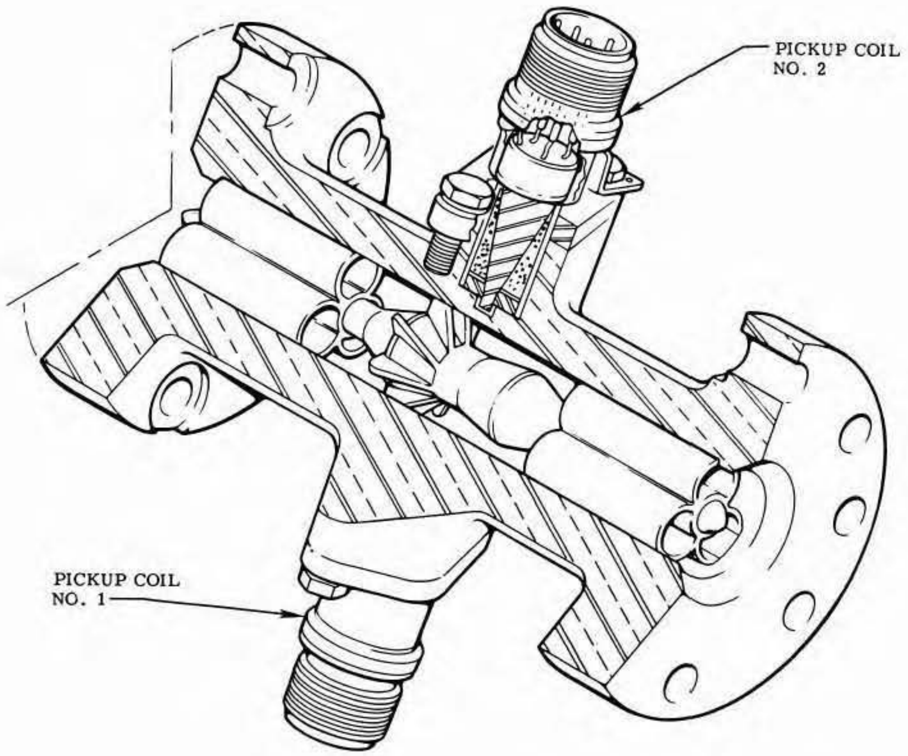

Figure 1-43. Oxidizer Flowmeter

density through the coil changes. The flux lines through the coil build up and collapse, generating an emf that can be measured at the connector. The magnitude of this emf is a function of the angular speed of the rotor, distance of the pickup from the top of the blades, and the blade material (a constant). The generated frequency is dependent on rotor speed and number of blades and is in direct correlation to flowrate. For checkout purposes, a sinusoidal input at 200 cps with a 10-volt peak on the auxiliary coil will produce a 1-3 volt peak signal at the same frequency on the primary or output coil.

1-102. SPEED TRANSDUCER DESCRIPTION.

1-103. The flight instrumentation system utilizes one speed transducer (figure 1-44). The transducer is a magnetic pickup type used to sense turbopump speed. The assembly consists of a probe section that houses the pickup coils, an adapter section (welded between the probe and electrical receptacle) that is threaded to allow installation of the unit into the torque gear housing of the turbopump, an electrical receptacle, and a pickup coil that serves as a

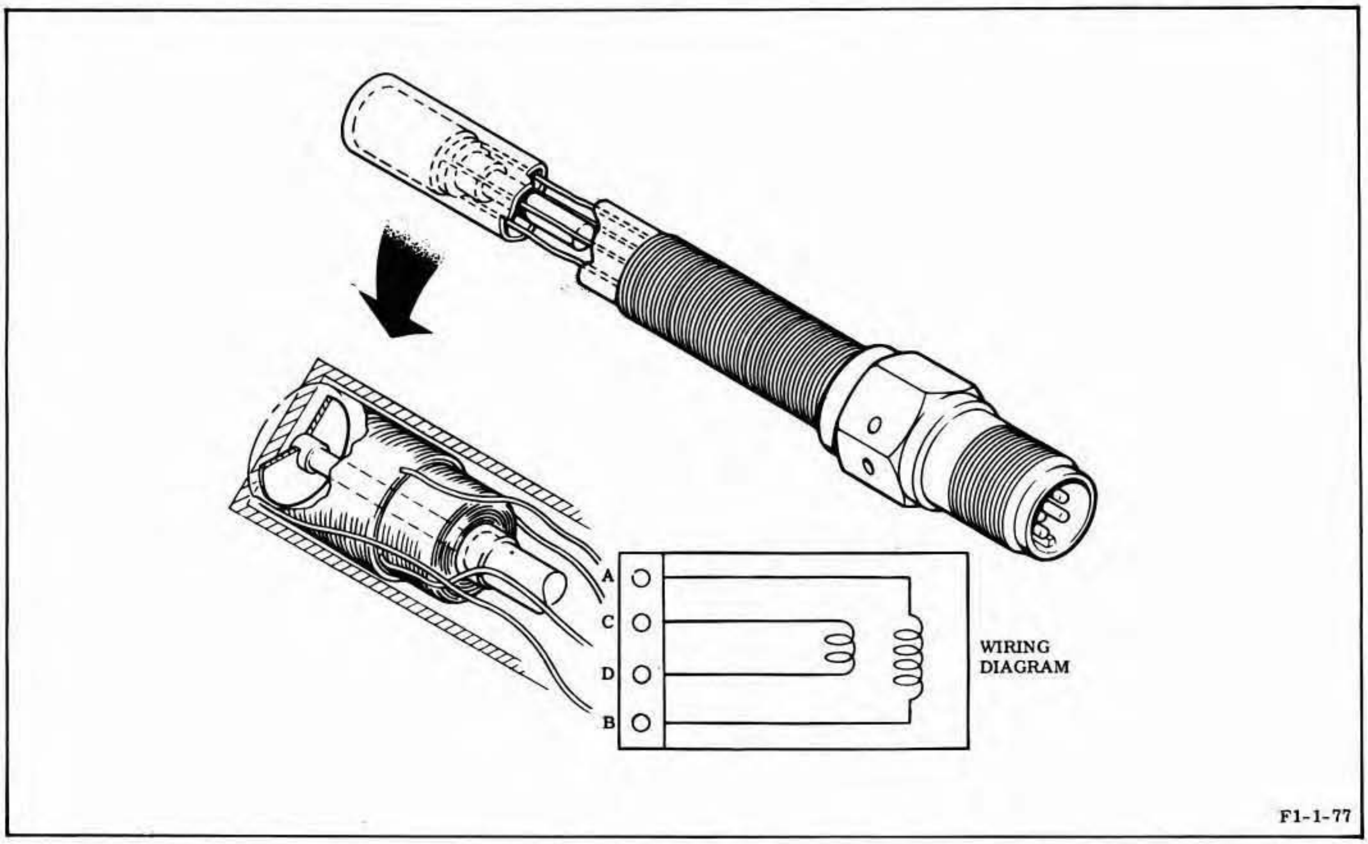

Figure 1-44. Speed Transducer

pulse generator. With the transducer installed, the tip of the probe aligns with the two-hole tachometer on the turbopump torque gear sleeve. As the turbopump shaft rotates and each hole passes the tip of the probe, the flux density of the pickup coil is interrupted. The buildup and collapse of the flux lines generate a voltage across the leads. This voltage, proportional to the pump shaft speed, is then conditioned for recording. The magnitude of the voltage is dependent on the angular speed of the turbopump shaft, the distance between the pickup coil and torque gear sleeve, and the medium of the gap. The frequency is determined by the angular speed of the pump shaft, and the number of holes in the torque gear sleeve.

1-104. THERMAL INSULATION SYSTEM DESCRIPTION.

1-105. Thermal insulation (figure 1-45) is supplied to protect the engine from extreme temperature environment caused by plume radiation and back-flow during vehicle flight. Thermal insulators for the engine are of two types, foil-batt and asbestos blanket.

1-106. Foil-batt insulators are preformed segments constructed of random fiber batting secured between two layers of textured inconel foil. The thickness of the thrust chamber insulator inner foil is 0.004 inch; outer foil thickness is 0.006 inch. Cocoon insulator foils are 0.006 inch thick. The cocoon insulator inner foil is vented to prevent ballooning due to expansion of gases trapped between the layers of foil. These insulators are used to cover large, flat areas of the thrust chamber and nozzle extension, heat exchanger lines and bellows, customer connect (wrap-around) lines, and the cocoon area (thrust chamber throat to interface panel).

Figure 1-45. Engine Thermal Insulation

1-107. Asbestos blanket insulators are composed of multiple layers of asbestos cloth reinforced with Inconel lockwire and coated on one side with aluminum. The asbestos blankets are laminates of two, four, or five layers, depending on the location on the engine. Asbestos blankets are used on the exit end of the nozzle extension, above the oxidizer dome between the gimbal bearing and interface panel, and below the cocoon between the thrust chamber and turbine manifold.

1-108. Hardware used to secure the thermal insulation to the engine consists of support structure, screws, self-locking nuts, flat washers, nut clips, bolts, and Inconel lockwire. Support structure (brackets, straps, and supports) is located primarily in the cocoon area. Protruding studs are percussion-welded onto hatbands of the thrust chamber to support and secure insulator panels. Brackets with nutplates are provided to secure insulator panels to the nozzle extension.

1-109. ENGINE PURGE AND DRAIN SYSTEM DESCRIPTION.

1-110. The engine purge and drain system (figure 1-46) provides a means of inhibiting contamination in the critical areas of the engine and permits safe disposition of expended coolant fluids, residual propellants, and seal leakage fluids. The engine purge system and the drain system are each divided into a service mode system and an operational mode system.

1-111. SERVICE MODE PURGE SYSTEM DESCRIPTION.

1-112. The service mode purge system utilizes facility-supplied gaseous nitrogen to expel residual propellants and fluids from the engine. The service mode purge system consists of quick-disconnect fittings on the No. 1 and No. 2 fuel valves for supplying gaseous nitrogen to the fuel valves and thrust chamber, one quick-disconnect on the hypergol manifold assembly to purge the hypergol container and ignition fuel hose of residual fluids, a quick-disconnect on the ignition monitor valve sense tube to purge the tube of residual fluid, a quick-disconnect at the bearing coolant control valve to purge the bearing coolant delivery lines of residual coolant fluid and preservative compound, and six threaded bosses on the oxidizer dome to purge the oxidizer dome and injector of residual flushing fluid.

1-113. OPERATIONAL MODE PURGE SYSTEM DESCRIPTION.

1-114. The operational mode purge system utilizes vehicle- and facility-supplied gaseous nitrogen to establish a pressure barrier to protect the oxidizer sections of the engine from contamination. The gaseous nitrogen is supplied to the engine through two purge fittings. One of the purge fittings provides gaseous nitrogen from the vehicle at 80 psig for purging the oxidizer pump intermediate seal. The other purge fitting directs gaseous nitrogen at 800 psig to the gas generator and No. 1 and No. 2 oxidizer valves to prevent contaminants from entering the oxidizer sections of the gas generator and thrust chamber during ignition and transition into mainstage.

1-115. SERVICE MODE DRAIN SYSTEM DESCRIPTION.

1-116. The service mode drain system enables residual fuel and control system fluid to be drained from the engine during maintenance and post-test securing of the engine. The service mode drain system consists of quick-disconnect fittings and drain plugs located at low points of the propellant feed and control systems. The quick-disconnect fittings utilized for draining residual fuel are located on the No. 1 and No. 2 fuel inlet elbows, No. 1 and No. 2 high-pressure fuel ducts, thrust chamber fuel inlet manifold, hypergol manifold, and gas generator. Quick-disconnect fittings for draining the control system fluid are located on the control system engine return line, control system engine supply line, and gimbal actuator return line. Four drain plugs located on the thrust chamber fuel return manifold permit the thrust chamber tubes to be drained of residual fuel, prefill fluid, or flushing solvent.

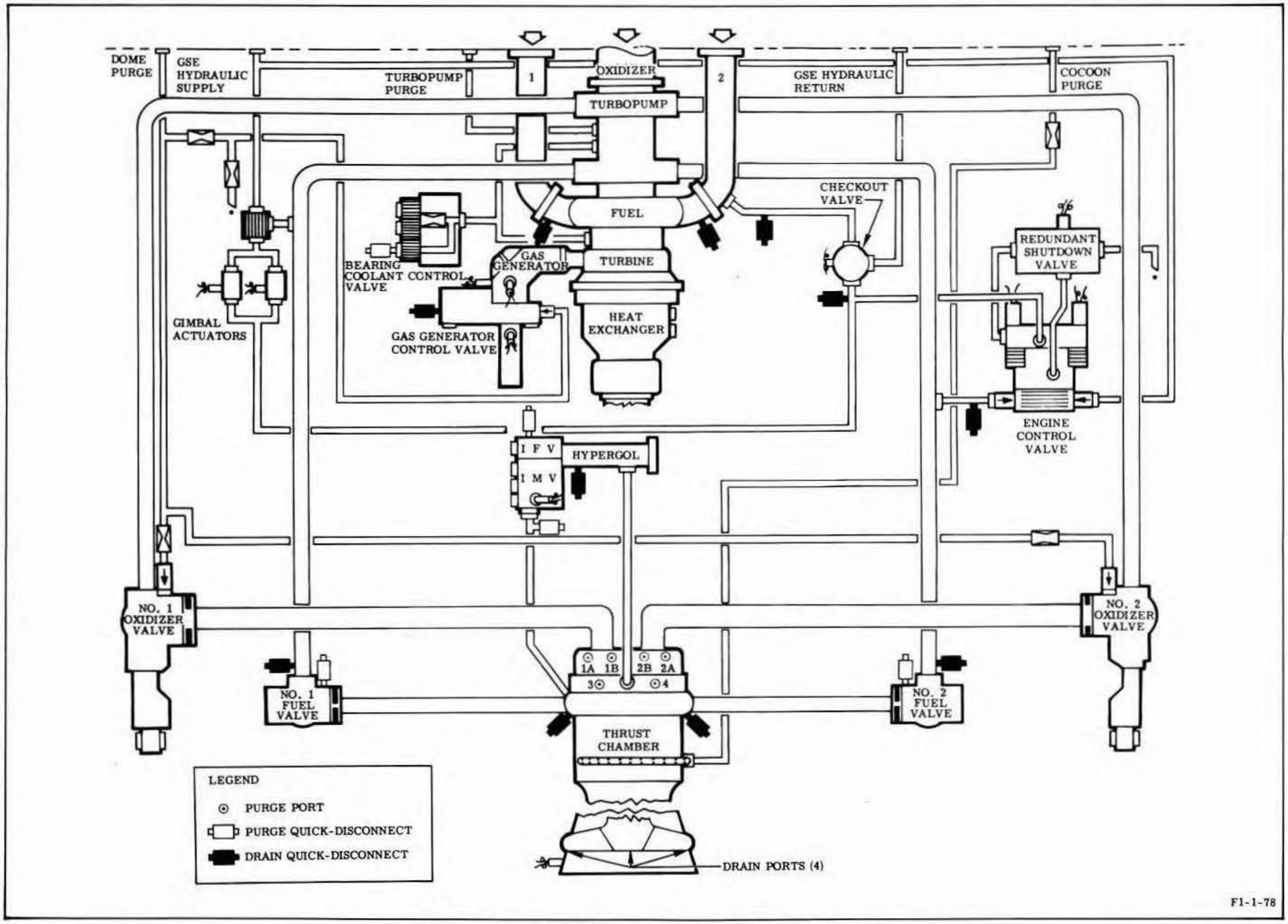

Figure 1-46. Engine Purge and Drain Schematic

1-117. OPERATIONAL MODE DRAIN SYSTEM DESCRIPTION.

1-118. The operational mode drain system furnishes a means of overboard disposition of fluid leakage past internal seals of certain components, and of expended bearing coolant fluid from the turbopump. The operational mode drain system consists of separate oxidizer and fuel overboard drain lines and a fuel drain manifold. Fuel and control fluid seal leakage and expended coolant fluid are collected into a single fuel overboard drain line on the No. 2 side of the engine. (See figures 1-47 and 1-47A.) The fuel drain manifold (figure 1-48) is the collective drain point for the expended coolant fluid and excess preservative compound remaining during turbopump preservative procedures. Oxidizer leakage past the primary oxidizer seal of the turbopump and the internal oxidizer seals of the No. 1 and No. 2 oxidizer valves and gas generator control valve are directed to an oxidizer overboard drain line on the No. 1 side of the engine. (See figure 1-49.) This line also directs overboard the purge flow through the oxidizer side of the turbopump intermediate seal. Paralleling the oxidizer overboard drain line on the No. 1 side of the engine is the nitrogen purge overboard drain line, which directs overboard the purge flow through the fuel side of the intermediate seal.

1-119. ENGINE OPERATIONAL REQUIREMENTS.

1-120. The engine requires a source of pneumatic pressure, electrical power, and propellants for engine operation. A ground-supplied hydraulic pressure source, hypergolic fluid, prefill fluid, and pyrotechnic igniters are required for engine start. Figure 1-50 lists facility-supplied inputs required for engine operation.

1-121. ENGINE OPERATION.

1-122. Engine operation is described within this section in terms of engine preparation stage, engine start and ignition, engine mainstage, and engine cutoff for a typical single engine in a test facility. This description is supplemented by an engine start and an engine cutoff block diagram flow chart (figures 1-51 and 1-52), an engine system schematic reflecting engine conditions during the respective stages of operation (figures 1-53, 1-54, 1-55, and 1-56), and engine start and cutoff sequence flow charts (figures 1-57 and 1-58). The sequence of engine start and shutdown is controlled by an electrical-hydraulic-mechanical system. Electrically, relays in the facility equipment, and solenoids and switches on the engine, are employed to start, maintain, and stop the sequence. An orificed hydraulic control system powers and sequences the propellant and control valves. Also, mechanically linked devices assist in sequencing propellant valve actuation.

1-123. ENGINE PREPARATION STAGE.

1-124. The engine preparation stage is that activity during which it is determined that the engine and the test facility are in a satisfactory condition for a safe engine start. The culmination of this activity is an ENGINE PREPARATION COMPLETE signal which, in conjunction with a facility preparation complete signal, makes electrical power available to the engine start switch.

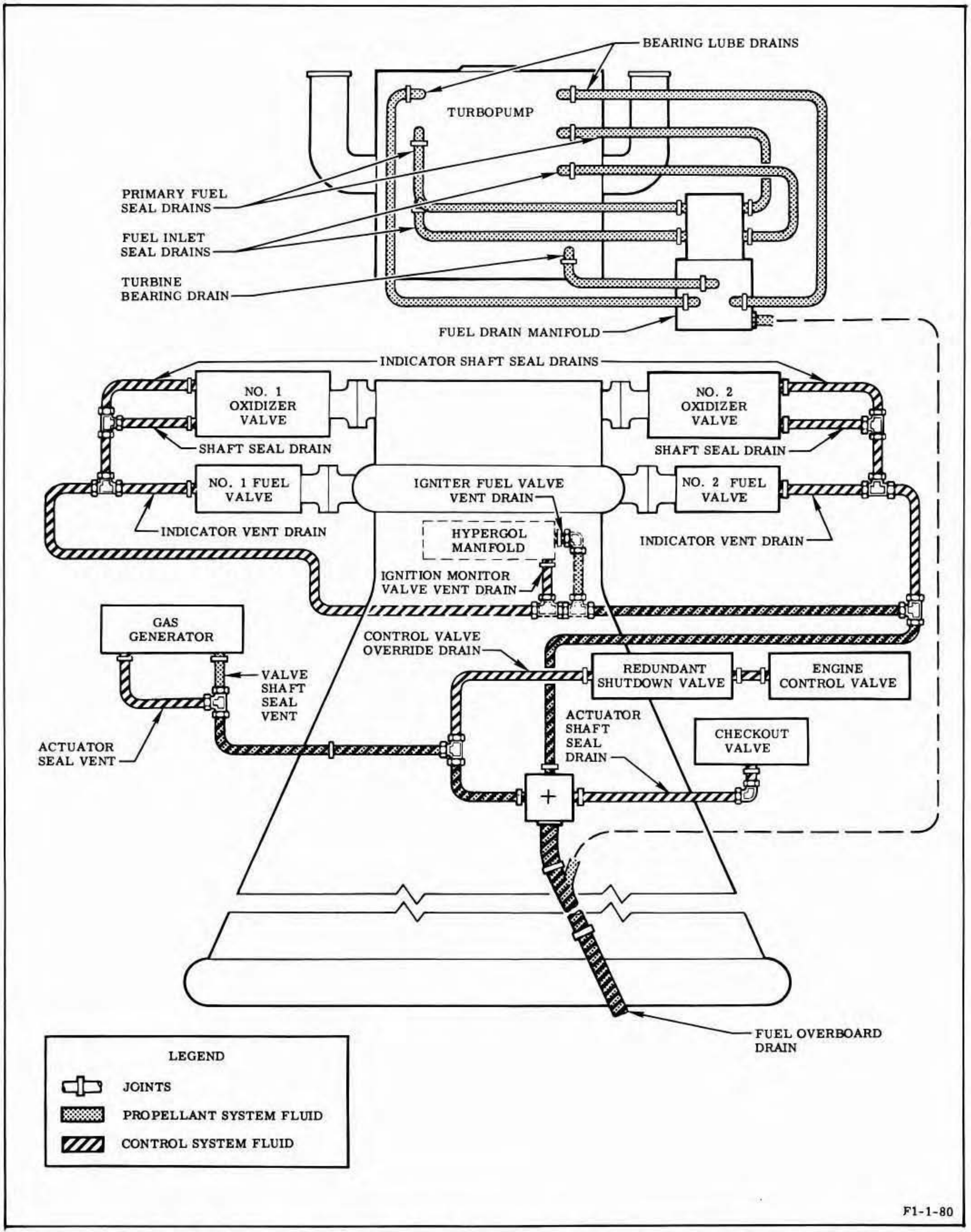

Figure 1-47. Engine Fuel and Control Fluid Overboard Drain Schematic (Engines No. Incorporating MD145 Change)

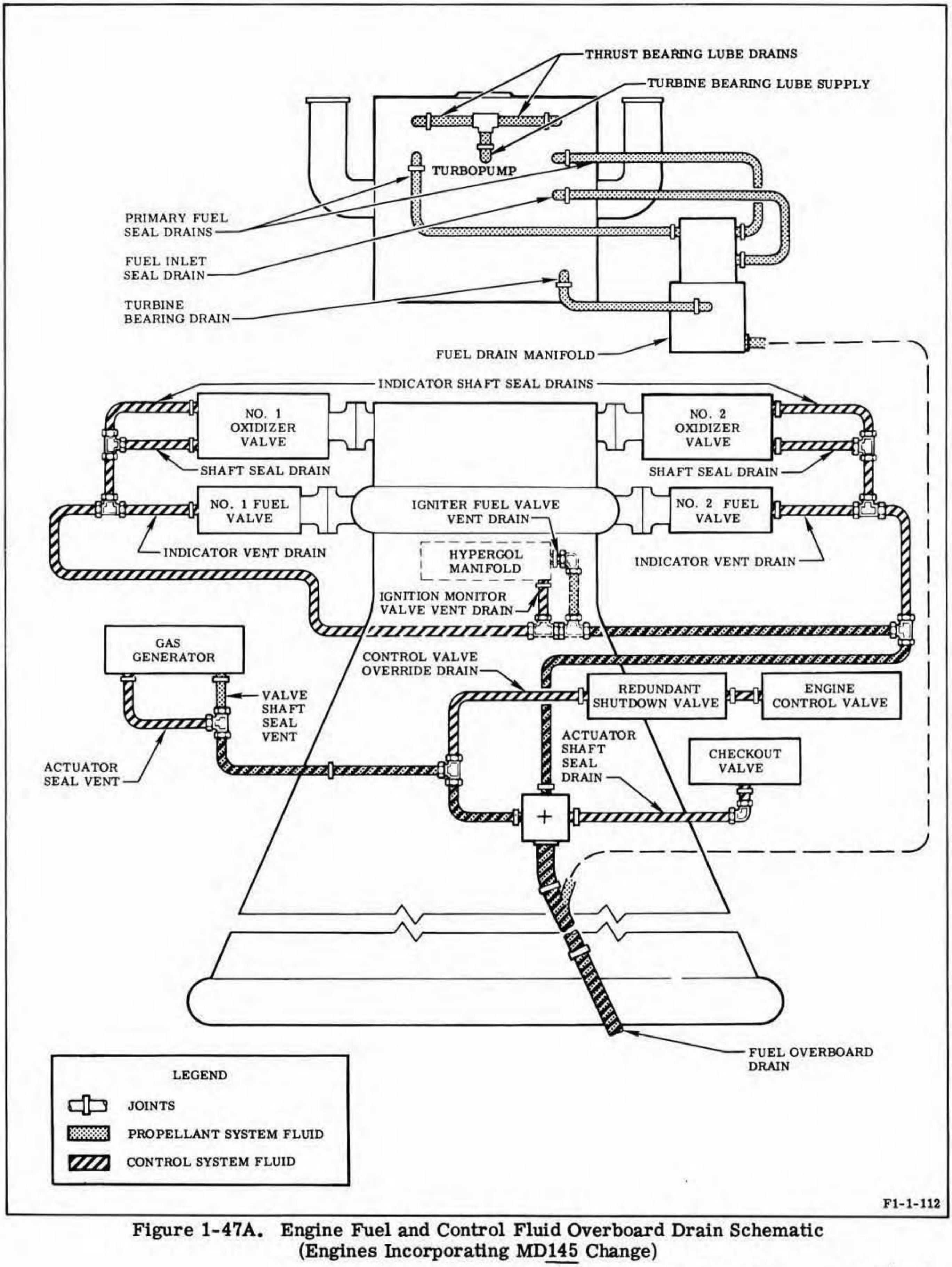

Figure 1-47A. Engine Fuel and Control Fluid Overboard Drain Schematic (Engines Incorporating MD145 Change)

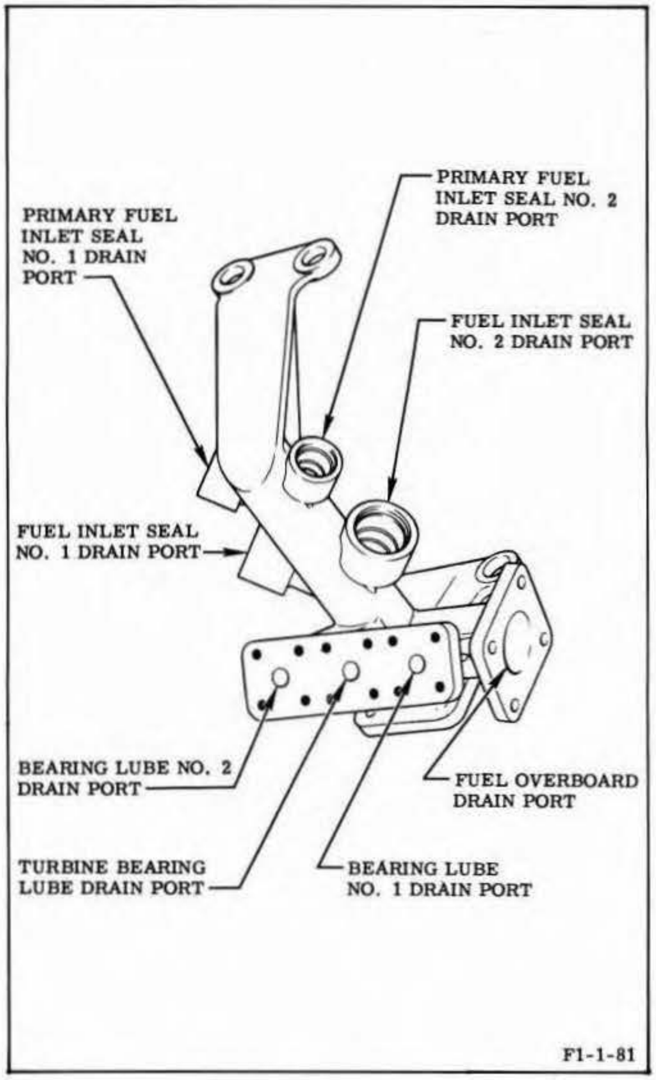

Figure 1-48. Fuel Drain Manifold

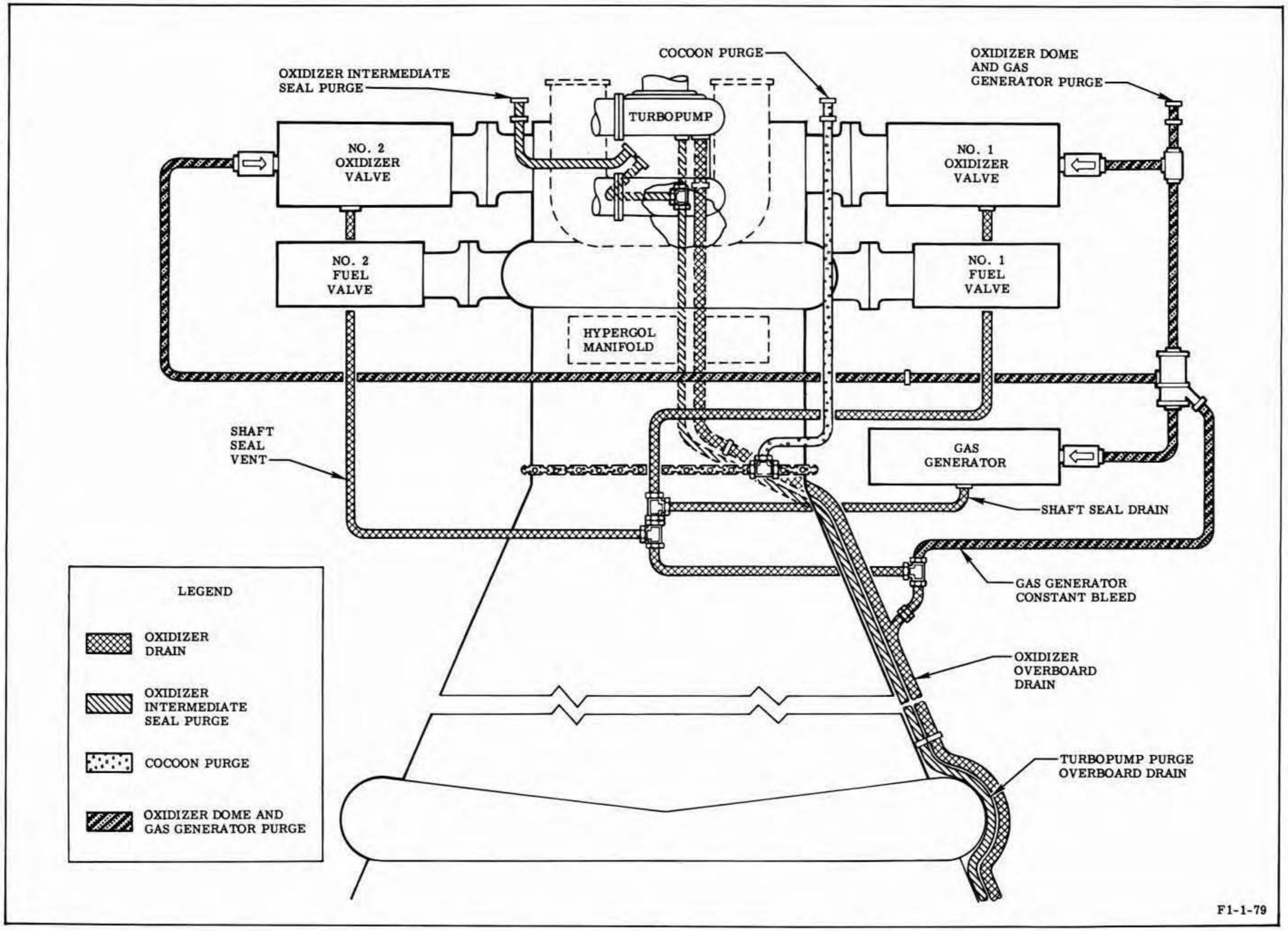

Figure 1-49. Engine Purge and Oxidizer Overboard Drain Schematic

PROPELLANTS	
Liquid oxygen (MIL-P-25508)	Gas generator and thrust chamber combustion
RP-1 fuel (MIL-R-25576)	Gas generator and thrust chamber combustion
PNEUMATICS	
800 psig gaseous nitrogen (MIL-P-27401)	Gas generator and thrust chamber domes purge
80 psig gaseous nitrogen (MIL-P-27401)	Turbopump oxidizer seal purge
100-200 psig gaseous nitrogen (MIL-P-27401)	Thermal insulation cocoon purge
250 psia helium (Bureau of Mines, Grade A)	Heat exchanger (vehicle fuel tank pressurization)
ELECTRICAL POWER	
5 vdc	Engine instrumentation system (valve potentiometer)
28 vdc	Engine control system
28 vdc	Engine instrumentation system (transducers)
5 vdc	Engine instrumentation system (transducer checkout)
220 vac	Turbopump heaters
500 vac	Engine pyrotechnic igniters
MISCELLANEOUS	
Pyrotechnic igniters (2)	Gas generator ignition
Pyrotechnic igniters (2)	Thrust chamber nozzle extension ignition
Hypergol igniter (1)	Thrust chamber ignition
Prefill fluid (105 gallons of ethylene glycol and water)	Thrust chamber tube inert prefill
1,500 psig RP-1 fuel (MIL-R-25576) or RJ-1 fuel (MIL-F-25558) pressure	Fluid power supply (prior to mainstage)

Figure 1-50. Engine Facility Requirements

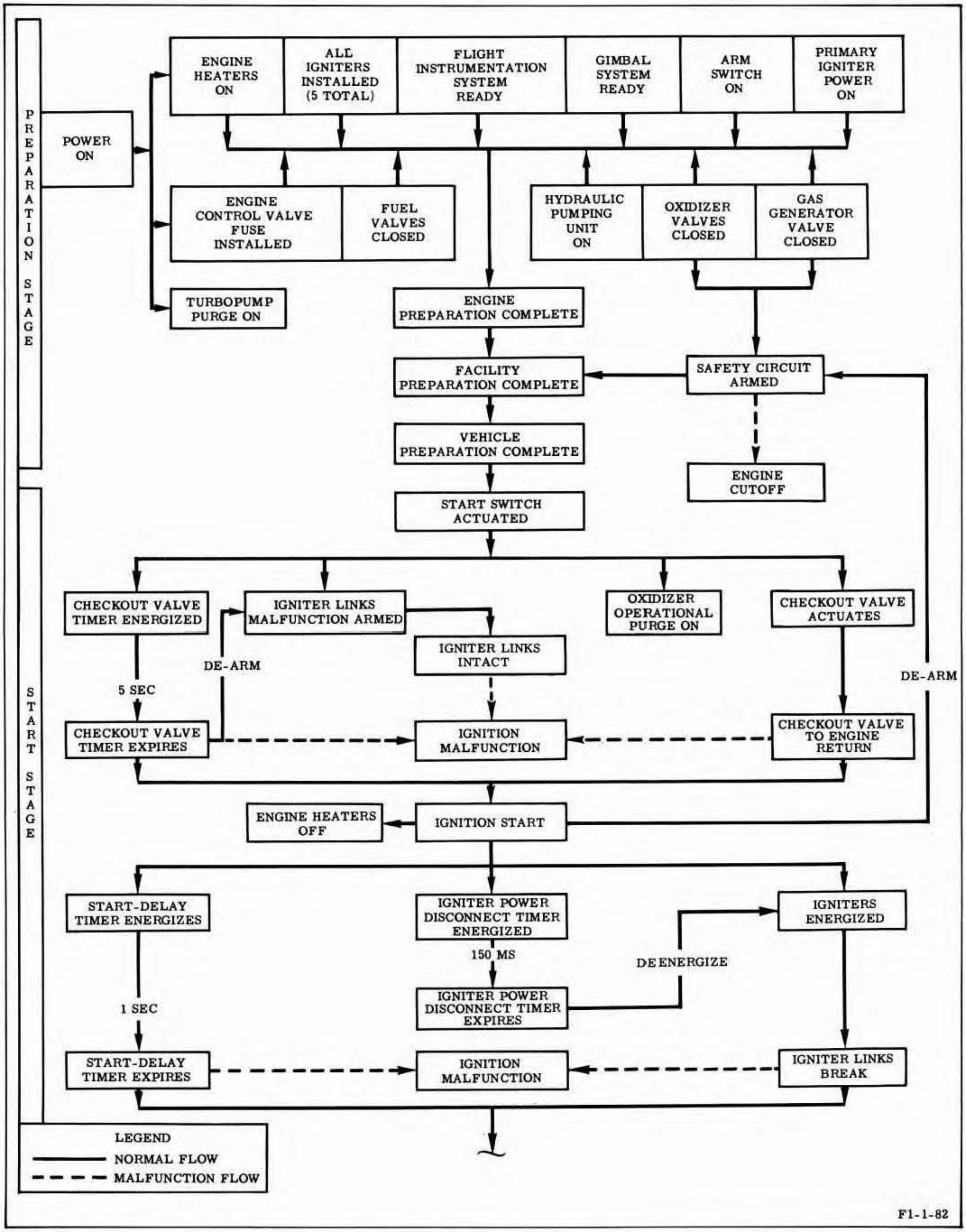

Figure 1-51. Engine Start Sequence (Typical Single Engine) (Sheet 1 of 2)

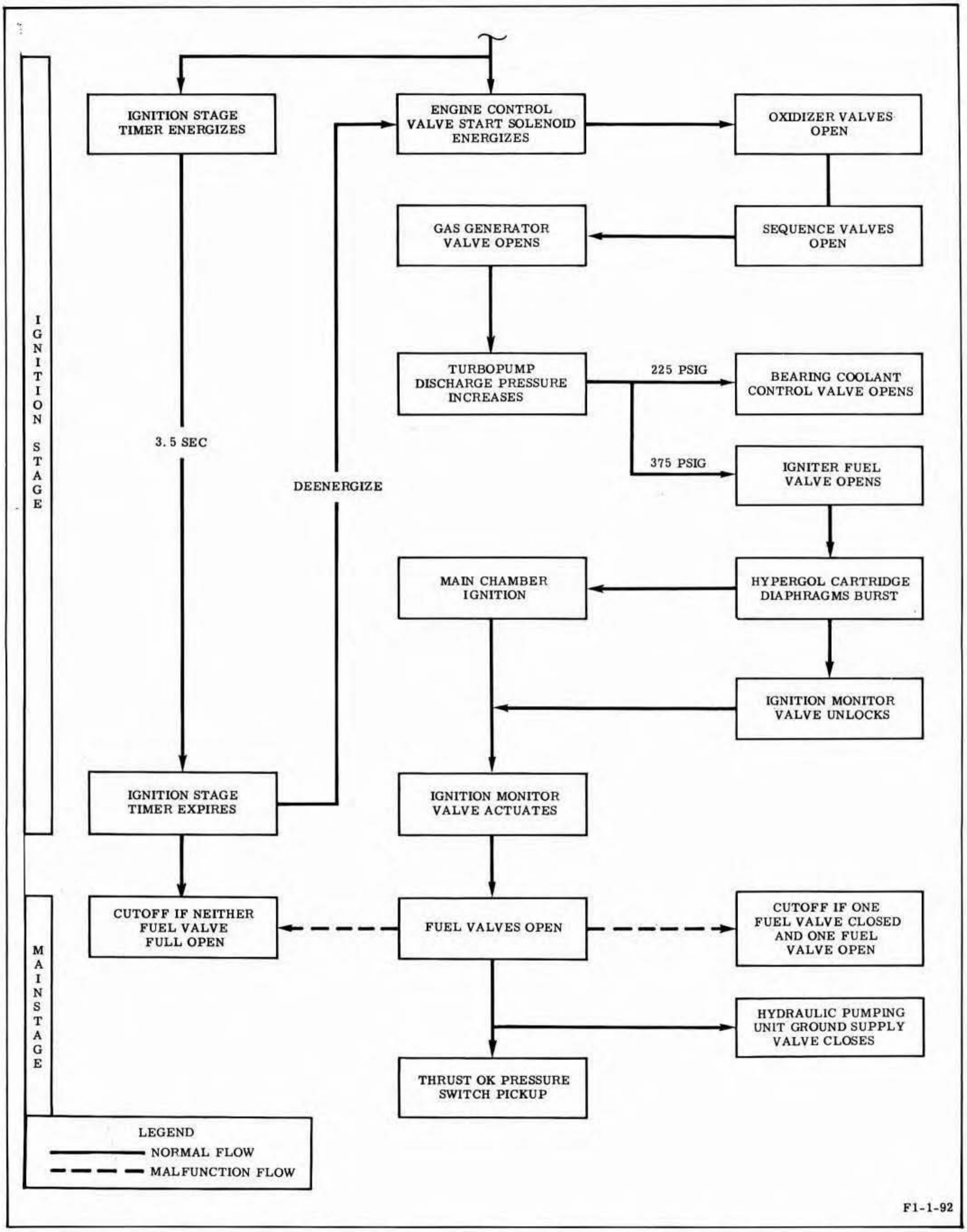

Figure 1-51. Engine Start Sequence (Typical Single Engine) (Sheet 2 of 2)

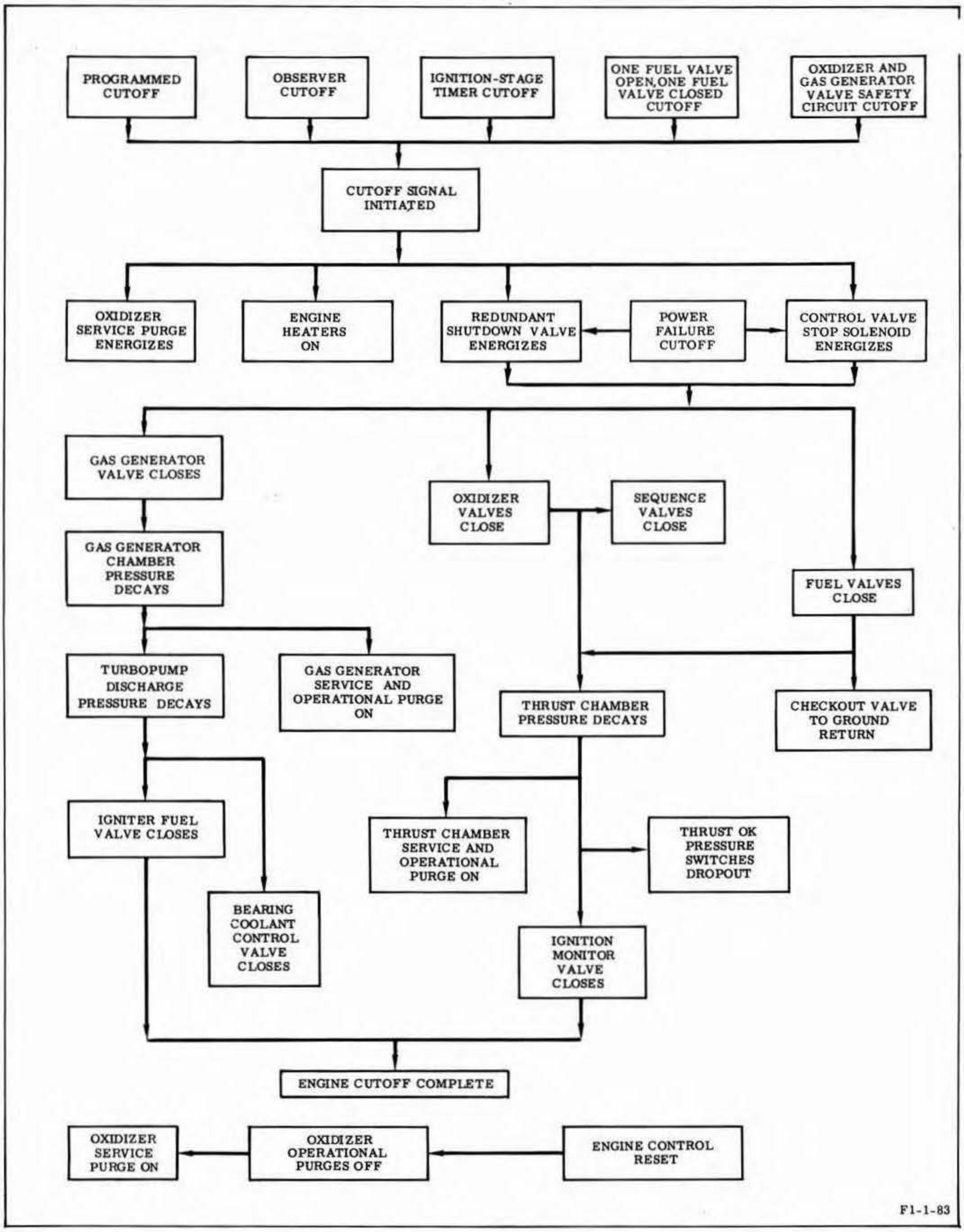

Figure 1-52. Engine Cutoff Sequence (Typical Single Engine)

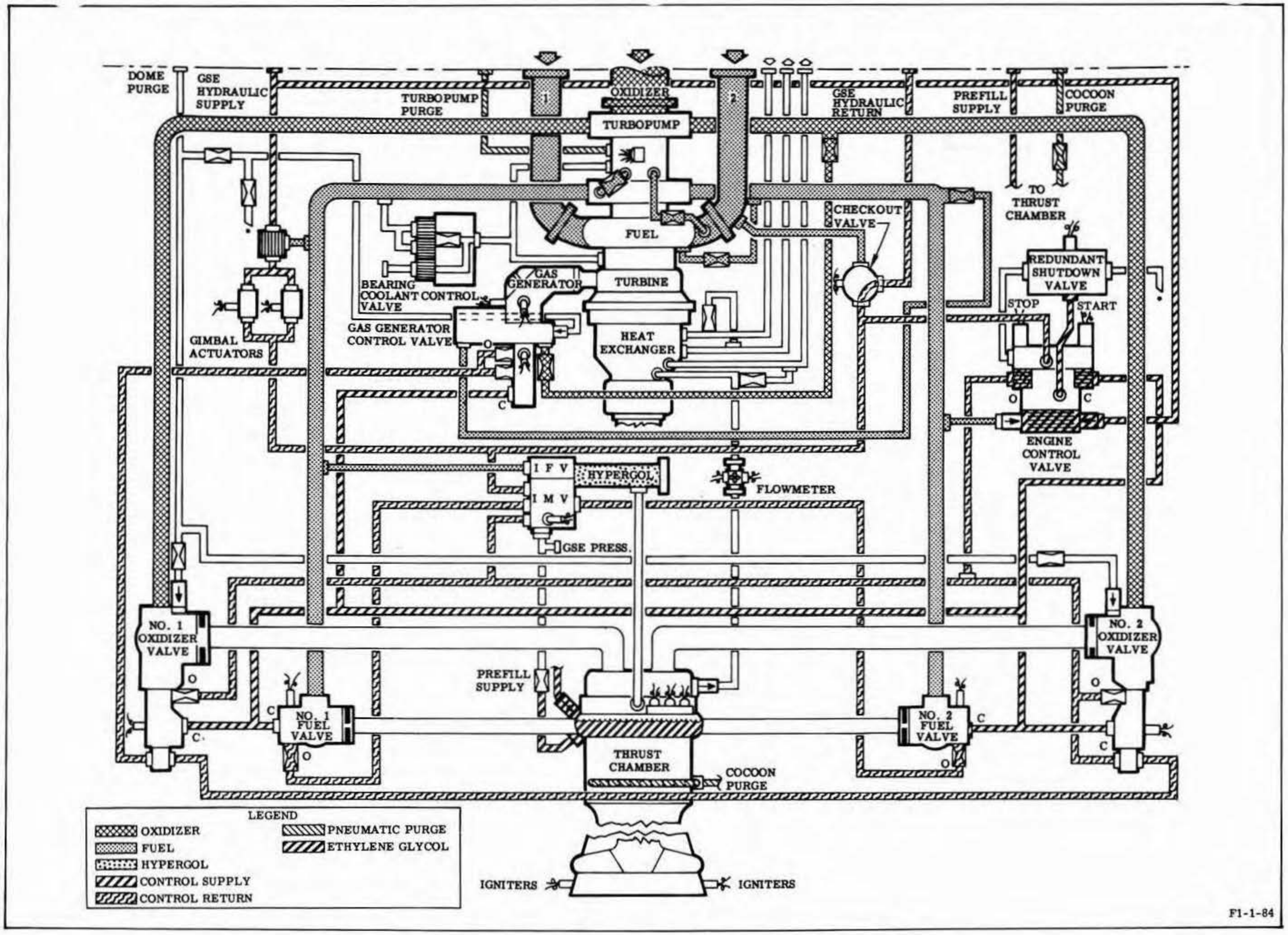

Figure 1-53. Engine Preparation Complete (Typical Single Engine)

1-125. ENGINE START AND IGNITION STAGE.

1-126. The engine start and ignition stage is that part of the engine operation that is initiated with the manual actuation of the engine start switch and extends through the period during which the propellant valves are opened, combustion of the propellants is established, and transition into mainstage takes place. The actuation of the engine start switch electrically initiates the automatic start sequence that causes the checkout valve to rotate to the engine return position, the oxidizer dome operational purge to come on, and a checkout valve timer to energize. When the checkout valve timer expires and the checkout valve is in the engine return position, the turbopump heaters are deenergized, electrical power is applied to the gas generator and nozzle extension pyrotechnic igniters, and a start delay timer energizes. When the start delay timer expires and burning of the igniters is electrically verified by the severence of the igniter links, the start solenoid of the engine control valve and an ignition stage timer are energized. The actuation of the start solenoid causes the control spool of the engine control valve to shuttle, which removes ground-supplied hydraulic closing control fluid from the propellant valves and applies the control fluid to the opening port of the No. 1 and No. 2 oxidizer valves and the inlet port of the ignition monitor valve.

1-127. Opening of the oxidizer valves permits oxidizer to flow to the combustion zone of the thrust chamber and also mechanically opens the sequence valves. When the sequence valves open, control fluid is directed to the opening port of the gas generator control valve. Opening of the gas generator control valve admits propellants to the gas generator combustor where the propellants are ignited by the gas generator igniters. The resultant fuel-rich hot gases are directed through the turbine and the thrust chamber exhaust manifold to the nozzle extension where the gases combine with the oxidizer-rich atmosphere in the thrust chamber and are ignited by the nozzle extension igniters. Flow of the gas generator combustion gases through the turbine causes turbopump rotation and the attendant increase of fuel and oxidizer pump discharge pressure.

1-128. When the fuel pump discharge pressure attains approximately 225 psig, the bearing coolant control valve opens and directs fuel to the turbopump bearings for lubrication and bearing cooling. When the fuel pump discharge pressure increases to approximately 375 psig, the igniter fuel valve poppet is offseated, admitting fuel to the hypergol igniter. The hypergol cartridge burst diaphragms rupture, which directs the hypergolic fluid, followed by ignition fuel, to flow to the thrust chamber combustion zone and establish ignition. The rupturing of the hypergol cartridge diaphragms unlocks the ignition monitor valve, and thrust chamber combustion pressure of approximately 20 psig, sensed at the control port of the ignition monitor valve, causes the ignition monitor valve poppet to shuttle. Shuttling of the poppet directs the control fluid at the inlet port to flow to the opening ports of the No. 1 and No. 2 fuel valves.

1-129. ENGINE MAINSTAGE.

1-130. Engine mainstage is that period of engine operation that is initiated when the engine has attained 90 percent of its rated thrust. Mainstage is signalled by the actuation of the thrust OK pressure switches. During the transition into mainstage, the control system pressure source is automatically transferred to the engine at the time engine fuel discharge pressure exceeds ground-supplied pressure. When the fuel valves reach the open position, the supply valve in the ground source control system supply line is closed. The ignition stage timer, which would have initiated an engine cutoff if the fuel valves had not opened within the time limit of the timer, expires and deenergizes the engine control valve start solenoid. The control spool is unaffected, because the spool has been hydraulically locked in the valve's open position.

1-131. ENGINE CUTOFF.

1-132. Engine cutoff is initiated electrically by simultaneously energizing the engine control valve stop solenoid and the redundant shutdown valve solenoid. When the engine control valve stop solenoid is energized, the control spool is shuttled to the valve's closed position, which removes opening pressure and applies closing

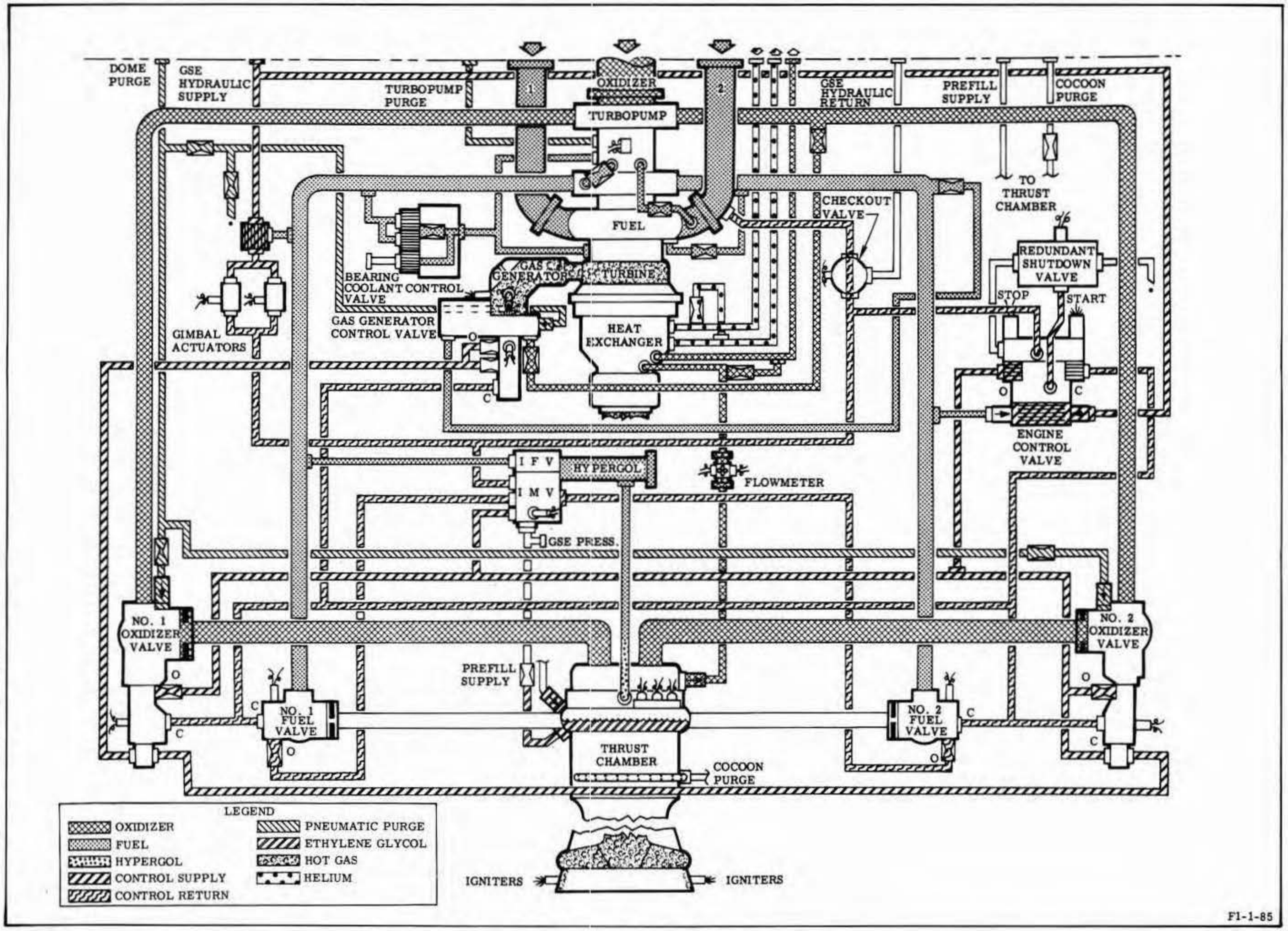

Figure 1-54. Engine Ignition Stage

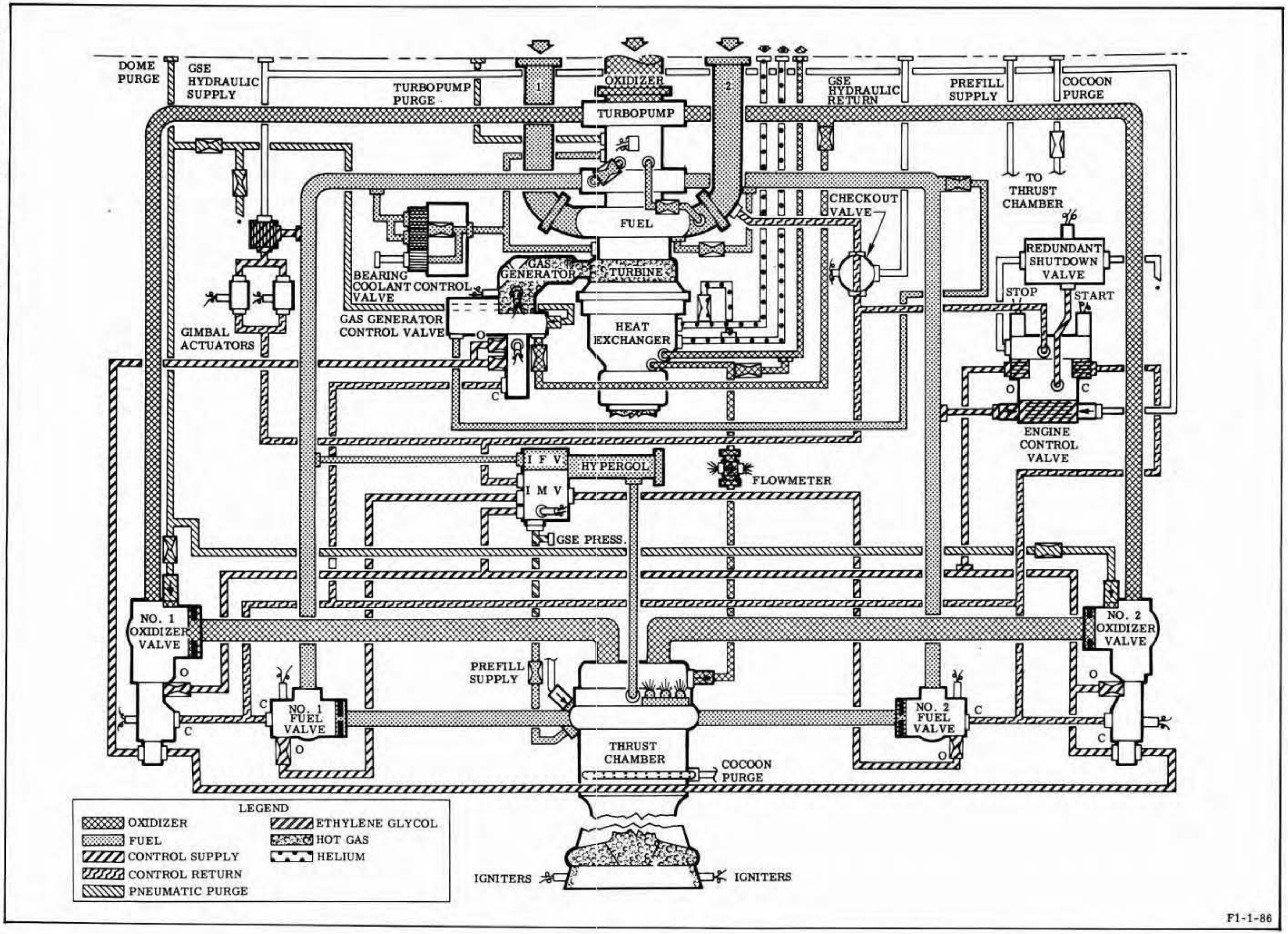

Figure 1-55. Engine Mainstage

pressure to the propellant valves. Energizing the redundant shutdown valve permits the valve to hydraulically actuate and direct control system pressure to the override port of the engine control valve. Pressure to the override port will cause the control spool to shuttle to the valve's closed position if the spool had not repositioned when the stop solenoid was energized. When closing control pressure is applied to the propellant valves, orifices in the control lines will sequence the gas generator control valve, oxidizer valves, and fuel valves closed, in that order.

1-133. At the time engine cutoff is initiated, the turbopump bearing heaters are reactivated and the oxidizer service purge is energized. Closing of the gas generator control valve removes power that drives the turbine and causes rapid decay of fuel discharge pressure. As fuel pressure decays, the igniter fuel valve and bearing coolant control valves close. Closing of the oxidizer and fuel valves causes a decay of combustion zone pressure in the thrust chamber and the resultant closing of the ignition monitor valve. When both the No. 1 and No. 2 fuel valves reach the closed position, the checkout valve is automatically returned to the ground return position and the ground source control system supply valve is reopened to supply closing pressure to the propellant valves until all residual propellants are drained from the engine.

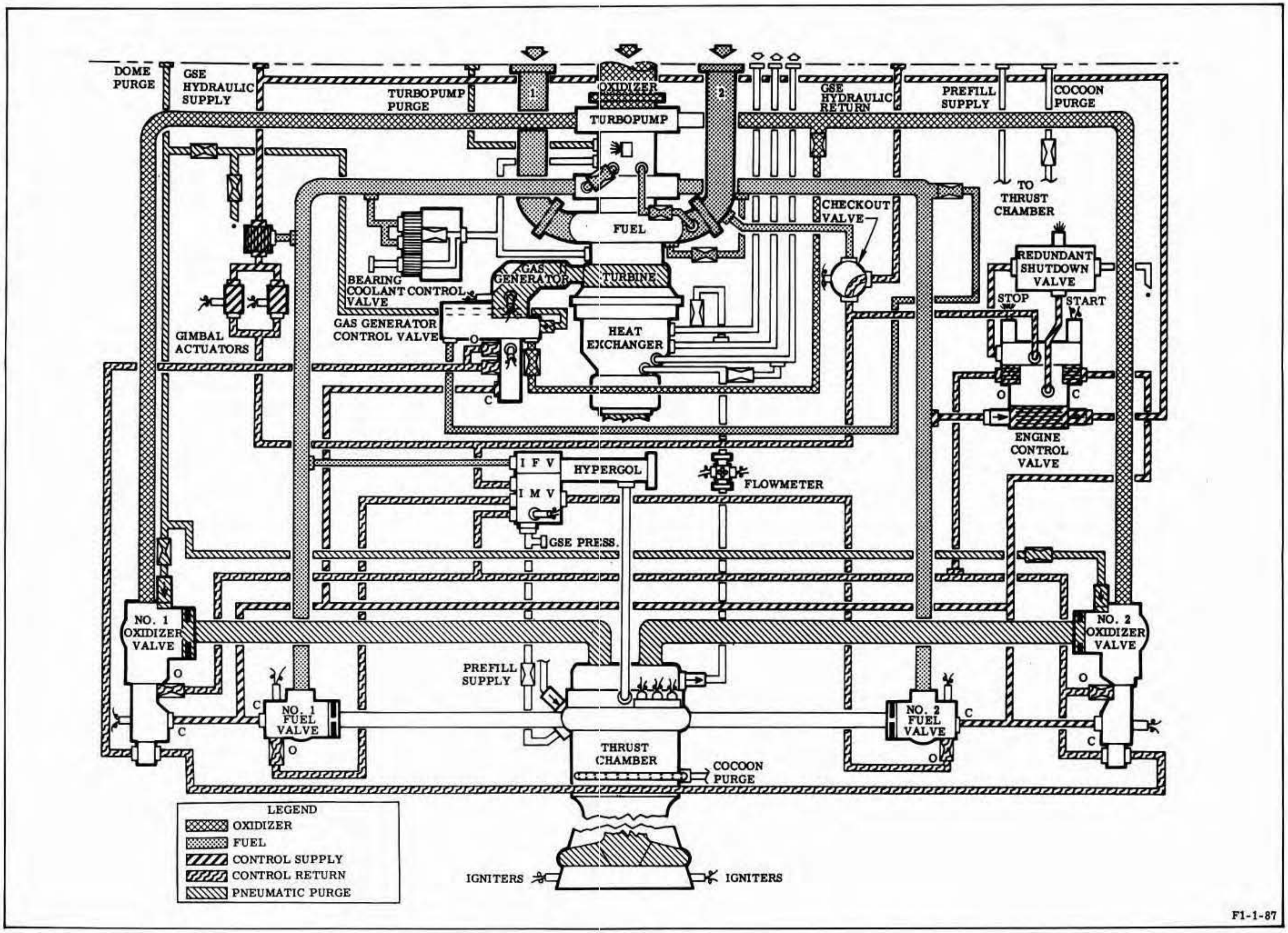

Figure 1-56. Engine Cutoff

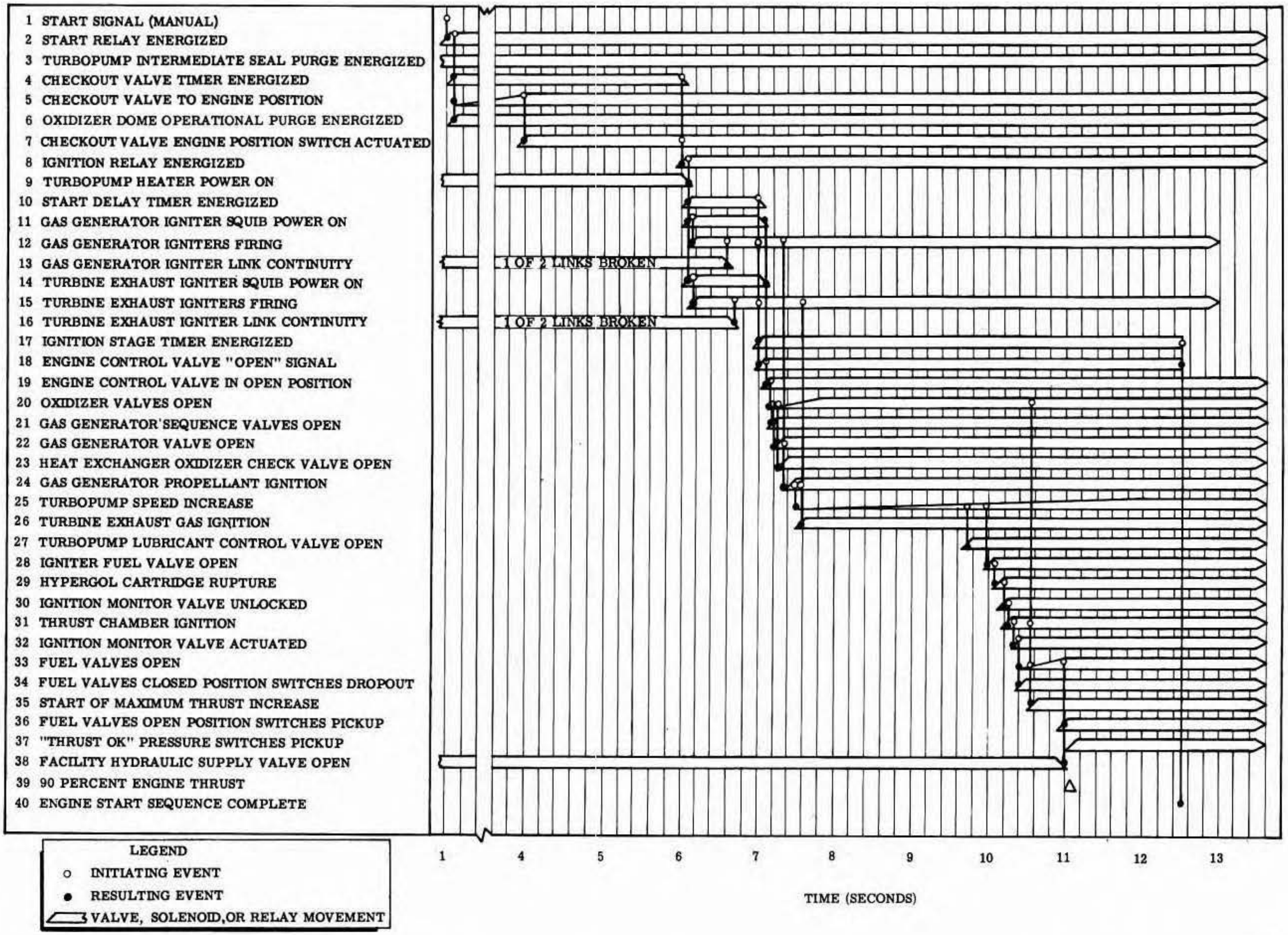

F1-1-36A

Figure 1-57. Engine Start Sequence Flow (Typical)

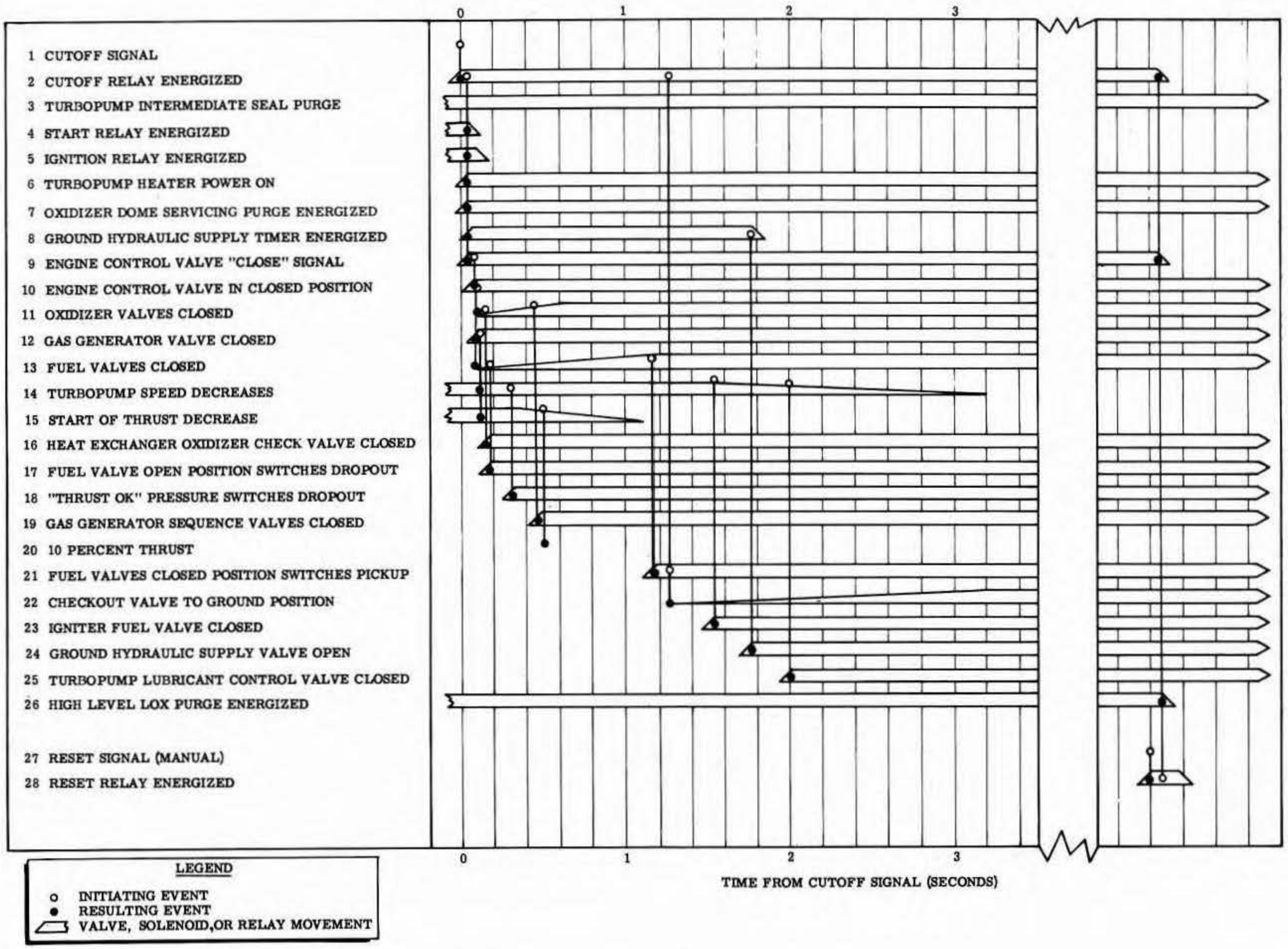

Figure 1-58. Engine Cutoff Sequence Flow (Typical)

1-134. F-1 ENGINE FLOW.

1-135. The following describes F-1 engine flow (figure 1-59) and events that take place from the time of Customer acceptance of the engine at Rocketdyne, Canoga Park, through Apollo/Saturn V launch at Kennedy Space Center (KSC). After offical acceptance of the engine (signing of DD Form 250), modifications may be made or maintenance tasks may be performed, with Customer approval, before shipment. The engine, nozzle extension, and loose equipment are shipped to the Michoud Assembly Facility (MAF) by either truck or ship. (Thermal insulation (TIS) is shipped to MAF by truck.) At MAF the engine is inspected and then assigned to a stage, designated as a spare, or left unassigned. Spare engines and unassigned engines are processed to a specific condition and placed in storage until needed. The normal flow of assigned engines consists of installing loose equipment and TIS brackets, performing modifications and maintenance, and installing the thrust vector control system on outboard engines. Single-engine checkout is performed, wrap-around ducts and hoses are installed, and the engines are installed in the stage. The stage and nozzle extensions are then shipped to the Mississippi Test Facility (MTF) by barge.

1-136. The stage is installed in the static test stand at MTF where the engines are inspected, and nozzle extensions, slave hardware, and static test instrumentation are installed. A pre-static checkout of the stage is performed, followed by a static test, to determine stage acceptability and flight readiness. After a successful stage static test, the engines are inspected, test data is reviewed, and the turbopumps are preserved. The nozzle extensions, slave hardware, and static test instrumentation are removed; then the stage is removed from the test stand, and the stage and nozzle extensions are shipped to MAF by barge. During normal stage flow at MAF, the installed-engines are inspected and refurbished; then a post-static checkout and a pre-shipment (to KSC) inspection are performed. The stage may be stored at MAF after engine refurbishment, depending on the stage schedule. The stage, nozzle extensions, loose equipment, and TIS are shipped to KSC by barge.

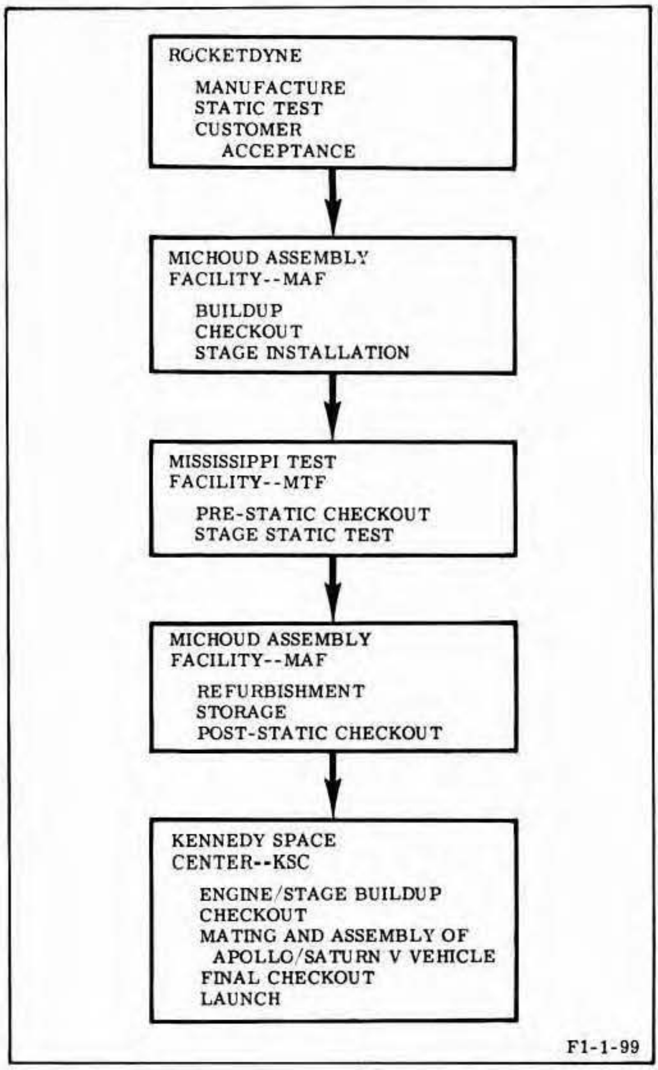

Figure 1-59. F-1 Engine Flow

1-137. At KSC the stage is erected onto the Launch Umbilical Tower (LUT) in the Vertical Assembly Building (VAB), where a visual inspection is performed, loose equipment is installed, modifications are made, and maintenance tasks are performed. Stage and engine leak and functional tests are performed, and final installation of the TIS is completed. While the first stage is being prepared, other tasks are being done to prepare the remaining stages and modules, and the spacecraft, to mate and assemble them into the complete Apollo/Saturn V Vehicle. The vehicle and mobile launcher are then moved from the VAB to the launch pad on the crawler transporter, where launch preparations and final checkouts are performed. With all preparations complete and all systems ready, the Apollo/Saturn V is launched. After launch, a post-flight data evaluation is made, to determine that the S-IC stage engines operated within the specified values during vehicle launch.

1-138. ENGINE FLOW BEFORE FIELD DELIVERY.

1-139. CUSTOMER ACCEPTANCE INSPECTION.

1-140. Customer acceptance inspection is performed when Contractor engine activity at Canoga Park is complete. The Customer reviews all documentation including Component Test Records, Engine Buildup Records, Engine Test Records, and Engine Acceptance Test Records in the Engine Log Book. The Customer verifies that the engine configuration information on the engine MD identification plate corresponds to that listed in the Engine Log Book, and upon acceptance of all records and documentation, signs DD Form 250, which constitutes official acceptance of the engine by the Customer.

1-141. POST-DD250 MAINTENANCE OR MODIFICATION.

1-142. If required before field delivery of an engine, post-DD250 maintenance or modification, as required by Engineering Change Proposals (ECPs) and Engine Field Inspection Requests (EFIRs), can be done at Rocketdyne with Customer approval. Upon completion of maintenance or modification, the Engine Log Book is updated, and the engine is accepted by the Customer.

1-143. ENGINE SHIPMENT TO MAF.

1-144. The engine, nozzle extension, and loose equipment is shipped to MAF by truck or ship as directed by the Customer. See figure 1-60. Detailed requirements for shipping the engine are in R-3896-9. Detailed requirements describing the use of handling equipment are in R-3896-3.

1-145. PREPARATION FOR SHIPMENT.

1-146. Preparation for shipment at the Contractor's facility consists primarily of removing the engine from buildup and test equipment, installing the engine and nozzle extension in shipping equipment, and packaging the loose equipment. Engine Rotating Sling G4050 is installed on the engine and a facility hoist lifts the sling and rotates the engine from vertical to the lowered (shipping) position, or from horizontal to the lowered position. A gaseous nitrogen purge is applied to the oxidizer pump seal during the time the engine is being rotated to the horizontal or lowered position. The engine is then secured on Air Transport Engine Handler G4044 in the lowered position and the sling removed. If the engine is to be shipped cross-country by truck, the turbopump shaft preload fixture is installed. A check is then made to make sure that Thrust Chamber Throat Security Closure G4089 is installed, that all desiccant is correctly secured, that the humidity range is acceptable, that openings are covered with suitable closures, and that the gimbal bearing is immobilized with Gimbal Bearing Lock G4059. The frame and Engine Cover G4047 are installed on the engine with the necessary forms sealed in the security pouch. Using a facility hoist and Engine Handler Sling G4052, the nozzle extension is installed on Nozzle Extension Handling Fixture G4080 and the loaded nozzle extension installed on Handling Adapter G4081. Because of shipping regulations governing transportation of ignition devices, the engine hypergol cartridge and pyrotechnic igniters are not shipped with the engine.

1-147. SHIPPING BY TRUCK.

1-148. Trucks are used to transport the engine, nozzle extension, and loose equipment, cross-country or to and from dock sites. Using a facility hoist and Engine Handler Sling G4052, the handler-installed engine and loaded nozzle extension (installed on the handling adapter) are loaded and secured on a low-bed, air-ride-equipped trailer. Loose equipment is packaged in boxes, loaded by forklift, and secured. For cross-country shipping, a calibrated impact recorder is installed on the handler. A truck transport checklist is used as a guide to verify that specified procedures are performed before truck departure and during cross-country shipping.

1-149. SHIPPING BY SHIP.

1-150. The engine, nozzle extension, and loose equipment are delivered to the ship by truck. The low-bed trailer is positioned on the ship's deck. Using a mobile crane, Engine Handler Sling G4052, and tractor, the Handler-installed engine is removed from the trailer, placed on the cargo deck; then moved forward and

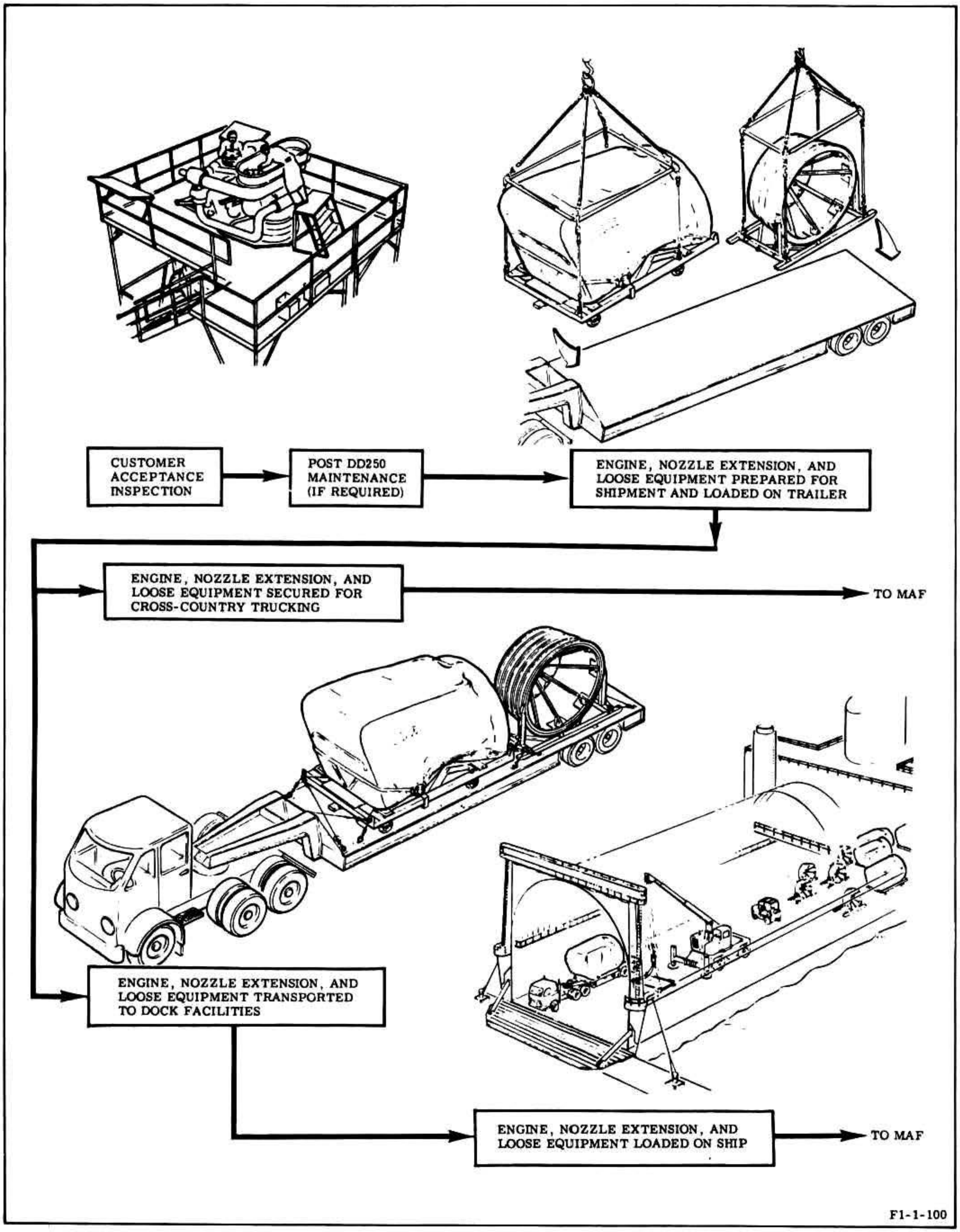

Figure 1-60. Engine Shipment to MAF

secured. The nozzle extension and loose equipment are removed from the trailer by mobile crane or forklift and secured to the cargo deck. The water transport checklist is used as a guide to verify that specified procedures are performed before departure, in transit, and after docking.

1-151. RECEIVING ENGINE AT MAF.

1-152. The Stage Contractor receives the engine and is responsible for engine flow at MAF. See figure 1-61. Detailed requirements for engine receiving by truck and ship are in R-3896-9. Detailed requirements describing the use of engine handling equipment are in R-3896-3.

1-153. RECEIVING BY TRUCK.

1-154. Engines, nozzle extensions, and loose equipment received by cross-country truck or by truck from the MAF dock are delivered to the Manufacturing Building where the equipment is visually inspected for shipping damage. If arriving at MAF by cross-country truck, the arrival time and date are recorded on the impact recorder chart. Using the facility hoist and Engine Handler Sling G4052, the handler-installed engine and nozzle extension are moved from the trailer to the floor. Loose equipment is removed from the trailer using a forklift. The nozzle extension is routed to the nozzle extension storage area, and loose equipment is routed to the Engine Support Hardware Center. The engine is routed to the engine area or to the bonded storage area (if unassigned), where the impact recorder and turbopump preload fixture are removed (if installed) and returned to Canoga Park.

1-155. RECEIVING BY SHIP.

1-156. When the ship arrives at the MAF dock, a tug, mobile crane, and low-bed trailer are positioned on the ship's cargo deck for the off-loading procedure. Using Engine Handler Sling G4052 and the mobile crane, the engine and nozzle extension are loaded and secured on the low-bed trailer. The loose equipment is loaded on the trailer by forklift. The trailers are moved into the Manufacturing Building, where the engine, nozzle extension, and loose equipment are inspected for shipping damage. Engine receiving then proceeds as described in paragraph 1-153.

1-157. UNASSIGNED-ENGINE FLOW AT MAF.

1-158. Unassigned-engine flow at MAF pertains to unassigned and spare engines. Upon receipt at the Manufacturing Building, unassigned engines are inspected for shipping damage, moved to the bonded storage area, inspected, and stored until scheduled for modification and/or assigned to a stage. Spare engines are processed through buildup and single-engine checkout, moved to the bonded storage area, and stored in a standby condition in case engine replacement is required. Single-engine checkout is required for all engines in storage over six months. If any discrepancies are observed during engine flow at MAF, Engine Contractor personnel perform unscheduled maintenance and repair or replace discrepant hardware on the engine. Discrepant hardware removed from the engine is routed to the CM&R area, where it is repaired and tested.

1-159. STORAGE RECEIVING INSPECTION.

1-160. Unassigned engines are visually inspected in the bonded storage area. The engine cover is removed, and the engine inspected for damage, corrosion, residual fluid on exterior surfaces, and surface wetting on the hydraulic control system exterior. It is verified that specified areas of the engine are coated with corrosion preventive, that humidity indicators indicate blue, and that line markings are correct. The turbopump preservation status is checked in the Engine Log Book, and the turbopump is serviced if required. The engine cover is reinstalled. Detailed inspection requirements for engines in storage are in R-3896-11.

1-161. ENGINE FLOW AT MAF. (See figure 1-62.)

1-162. When an uninstalled engine is received in the engine area, it is removed from Air Transport Engine Handler G4044, rotated to the vertical position, and placed on Engine Handling Dolly G4058 using Engine Rotating Sling G4050 and the facility hoist. The engine is then moved into a workstand where receiving inspection and engine buildup are accomplished. After engine buildup, the engine is placed into a test stand for single-engine checkout and installation of wrap-around lines. The engine is then removed from the test stand, rotated to the horizontal position, and installed on Engine Handler G4069. The oxidizer pump seal is purged with gaseous

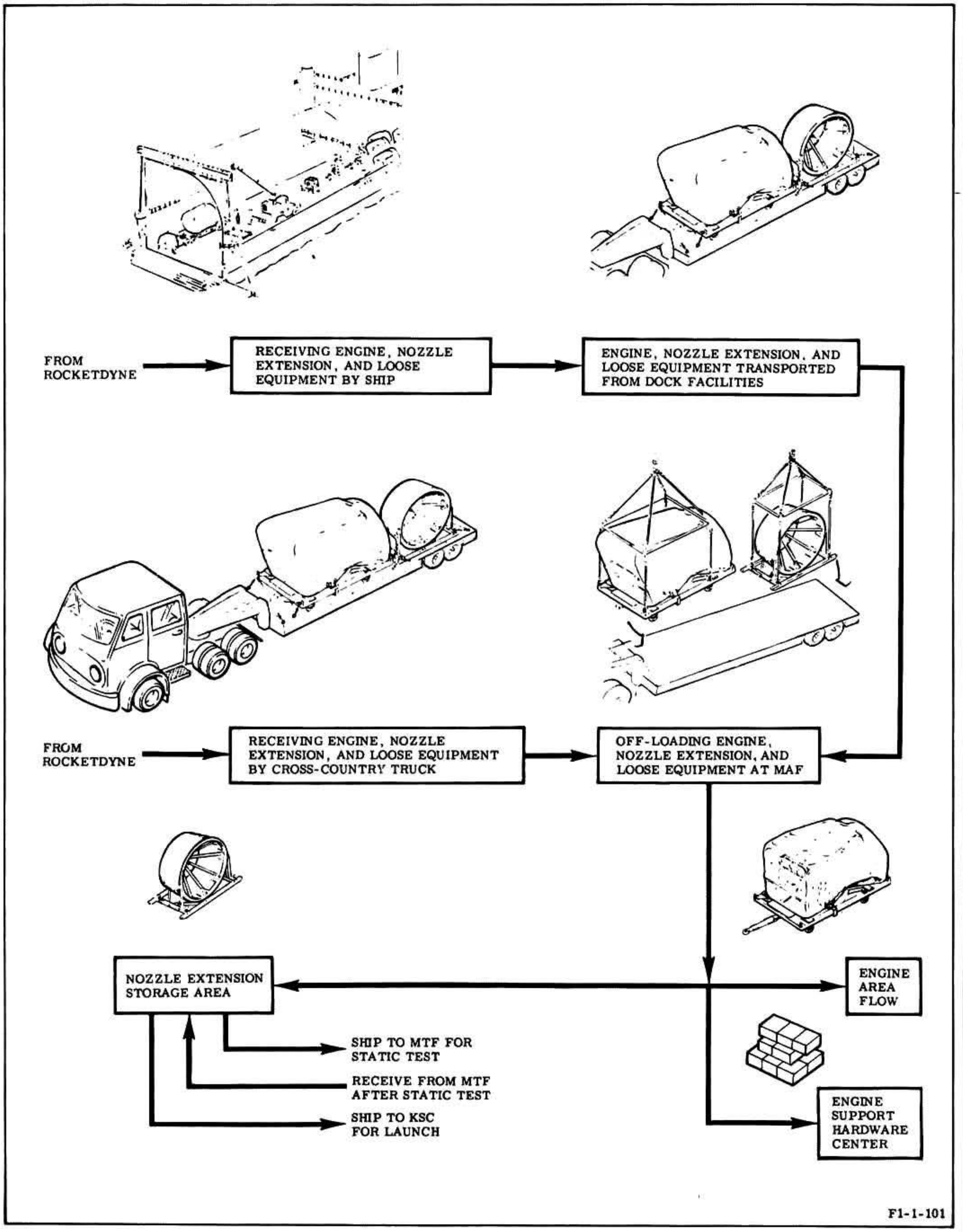

Figure 1-61. Receiving Engine at MAF

nitrogen during engine rotation to the horizontal position and for 30 minutes (minimum) thereafter. The engine is moved to the Stage Horizontal Final Assembly Area, where the engine is prepared for installation, installed in the stage, and inspected in preparation for shipment to MTF. Engine modifications are made as required during engine flow at MAF. If any discrepancies are observed, Engine Contractor personnel perform unscheduled maintenance, and repair or replace hardware on the engine. Discrepant hardware removed from the engine is routed to the CM&R area, where it is repaired and tested. Detailed requirements describing the use of engine handling equipment are in R-3896-3.

1-163. RECEIVING INSPECTION.

1-164. After installation in the single-engine workstand in the engine area of the Manufacturing Building, each assigned engine undergoes an overall visual receiving inspection. The engine is visually inspected for damage, corrosion, and missing equipment; for evidence of fluid in drain line exits or on the engine exterior; and for surface wetting on the hydraulic control system exterior. It is verified that corrosion preventive and aluminum-foil tape is present in specified areas, line markings are correct, humidity indicators indicate blue, and there are no voids in the turbopump housing cavity filler material. A clean polyethylene bag is installed on the fuel overboard drain line, the turbopump preload fixture is removed, and orifice sizes and serialized components are checked against those listed in the Engine Log Book. Detailed inspection requirements for engines received at MAF are in R-3896-11.

1-165. ENGINE BUILDUP, MODIFICATION, AND MAINTENANCE.

1-166. LOOSE EQUIPMENT INSTALLATION. Loose equipment that does not interfere with single-engine checkout is installed during engine buildup. The electrical cable support post is installed only on engines assigned to the outboard positions. The interface panel-to-oxidizer inlet insulation seal is installed on all engines. Wrap-around ducts and hoses are not installed at this time.

1-167. THERMAL INSULATION BRACKETRY INSTALLATION. The field-installed thermal insulation bracketry is normally stored at MAF until installation on the engine. All brackets are installed except for the bracket that attaches to the engine handling bearing. The engine handling bearing is an attach point for securing the engine onto Engine Handler G4069; therefore, the bracket is installed after the engine is installed on the stage. Requirements for installing thermal insulation brackets are in R-3896-6.

1-168. MODIFICATION AND MAINTENANCE. Modifications are made and maintenance tasks are performed during engine buildup, whenever possible. Engine modifications and special inspections consist of incorporating retrofit kits, as a result of Engineering Change Proposals (ECPs), and implementing Engine Field Inspection Requests (EFIRs). Engine maintenance involving component removal and replacement or turbopump disassembly, if required, is done in the engine workstands. Component modification, repair, and functional testing are done in the environmentally controlled CM&R area.

1-169. THRUST VECTOR CONTROL SYSTEM INSTALLATION. The thrust vector control system is installed by the Stage Contractor on engines assigned to the outboard positions. This system consists of two gimbal actuators, hydraulic supply and return lines, and a hydraulic filter manifold.

1-170. SINGLE-ENGINE CHECKOUT.

1-171. Single-engine checkout is done after receiving inspection and after engine buildup tasks are completed. The engine is installed in the test stand, where the ignition monitor valve sense tube is disconnected, Thrust Chamber Throat Security Closure G4089 removed, and Thrust Chamber Throat Plug G3136 installed. All connections are made between the engine and Engine Checkout Console G3142; facility electrical, pneumatic, and hydraulic sources are applied to the console; and the console is prepared for operation. Electrical system function and timing tests, a turbopump torque test, pressure tests, valve timing tests, and leak and function tests are done in accordance with the detailed requirements in R-3896-11. Upon completion of engine checkout, the ignition monitor valve sense tube is connected, Thrust Chamber Throat Plug G3136 removed, and Thrust Chamber Throat Security Closure G4089 installed.

1-172. WRAP-AROUND DUCT AND HOSE INSTALLATION.

1-173. The loose-equipment wrap-around ducts and hoses are installed on the engine in the test stand after single-engine checkout. The helium, GOX, and hydraulic wrap-around ducts and the purge and prefill hoses are installed and connected to flanges used for test setups during engine testing. The ducts and hoses are alined using alinement tool T-5041233 and supported with support set T-5046440 to prevent movement until the engine is installed in the stage and interface connections are completed. The engine is then removed from the test stand. Detailed requirements for installing and alining wrap-around ducts and hoses are in R-3896-3.

1-174. ENGINE INSTALLATION AT MAF. (See figure 1-63.)

1-175. PREPARATION FOR ENGINE INSTALLATION. The engine is rotated to the horizontal position and installed on Engine Handler G4069 using Engine Rotating Sling G4050 and the facility hoist. The oxidizer pump seal is purged during engine rotation to the horizontal position and for 30 minutes (minimum) thereafter. After removing the interface panel access doors, the oxidizer and fuel inlet covers are removed, the inlets inspected for contamination, the oxidizer inlet screen and seal secured in place, and the inlets covered with Aclar film. The fuel overboard drain system is isolated using clean polyethylene bags. The gimbal boot cover is removed, and it is verified that the gimbal bearing locks are installed, the electrical cable support post is installed on engines assigned to outboard positions, and the engine gimbal wrap-around lines are installed and adequately supported. When ready for installation in the stage, the engine is moved to the Stage Horizontal Final Assembly Area and positioned under a mobile hoist (A-frame). Thrust Chamber Throat Security Closure G4089 is removed and the thrust chamber inspected. The engine horizontal installation tool is suspended from the mobile hoist, prepared for engine installation, and then installed in the thrust chamber. The engine is then removed from Engine Handler G4069 and raised and rotated to the position required for engine installation. Detailed requirements for fuel overboard drain system isolation and engine preparation for installation are in R-3896-11.

1-176. ENGINE INSTALLATION. (See figure 1-63.) When preparations for engine installation are completed and the engine is correctly positioned in the stage, the engine gimbal bearing is mated and secured to the stage attach point. On the outboard engines, the gimbal actuators are secured to the stage actuator locks, while on the inboard engines, the stiff arms are secured to the actuator locks. Gimbal bearing locks are removed, and the gimbal boot is reinstalled on the gimbal bearing. The engine horizontal installation tool is removed from the thrust chamber after the engine is secured to the stage; then the Thrust Chamber Throat Security Closure G4089 is installed. Aclar film is removed from engine oxidizer and fuel inlets, fuel inlet seals and screens are installed, and stage ducting is connected to the engine inlets. The interface electrical connectors and stage pressure switch checkout supply line are connected at the interface panel, and the wrap-around ducts and hoses are connected to the stage. The thermal insulation bracket that attaches to the engine handling bearing is installed as specified in R-3896-6. Detailed requirements for installing the engine are in R-3896-11.

1-177. MANUFACTURING INSTALLATION VERIFICATION. When engine installations and stage assembly are completed, the Stage Contractor performs a manufacturing installation verification. This verification consists of a gaseous nitrogen leak test of the engine interface connections and stage systems.

1-178. INSTALLED-ENGINE INSPECTION BEFORE STAGE SHIPMENT TO MTF.

1-179. The installed-engine inspection before shipment to MTF is made after the stage assembly and verification tests are complete. Each engine is visually inspected for damage, corrosion, and missing equipment; for evidence of fluid in drain line exits, fluid on the engine exterior; and for surface wetting on the hydraulic control system exterior. It is verified that corrosion preventive and aluminum-foil tape is present in specified areas, line markings are correct, the humidity indicator in the thrust chamber throat security closure indicates blue, and there are no voids in the turbopump housing cavity filler material. The fuel overboard drain system isolation polyethylene bags are visually inspected for fluid. If fluid is present, the bags

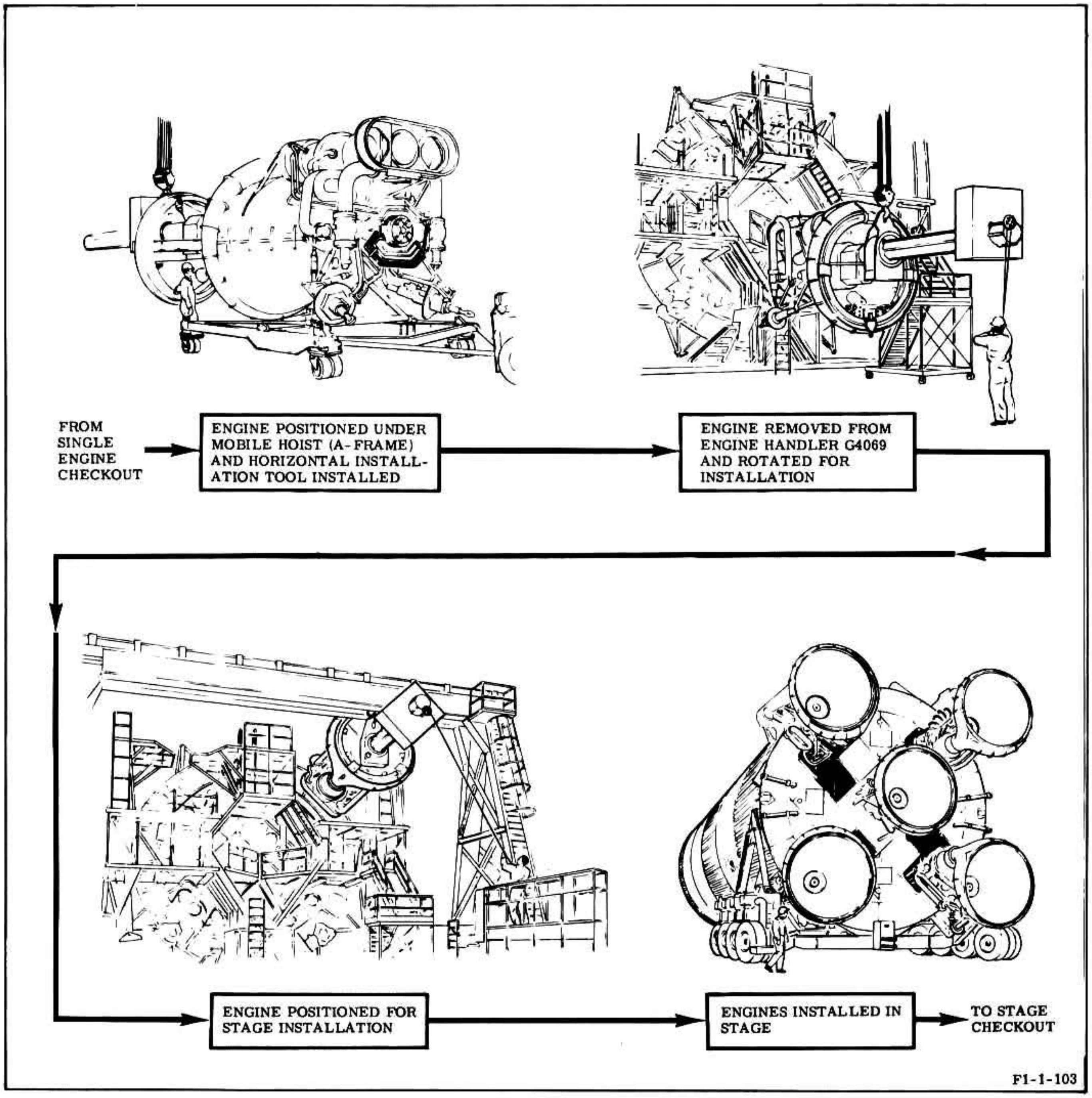

Figure 1-63. Engine Installation at MAF

are emptied and the quantity of fluid is measured. The turbopump preservation status is checked in the Engine Log Book, and the turbopump is serviced if required. A final updating of the Engine Log Book is made before engine shipment to MTF. Detailed procedures for inspecting the installed engine before shipment to MTF are in R-3896-11.

1-180. <u>STAGE SHIPMENT TO MTF</u>. (See figure 1-64.)

1-181. When installed-engine inspection is complete, the forward stage cover and engine covers are installed, the workstands and platforms are rolled away from the engines, a tractor is connected to the stage transporter,

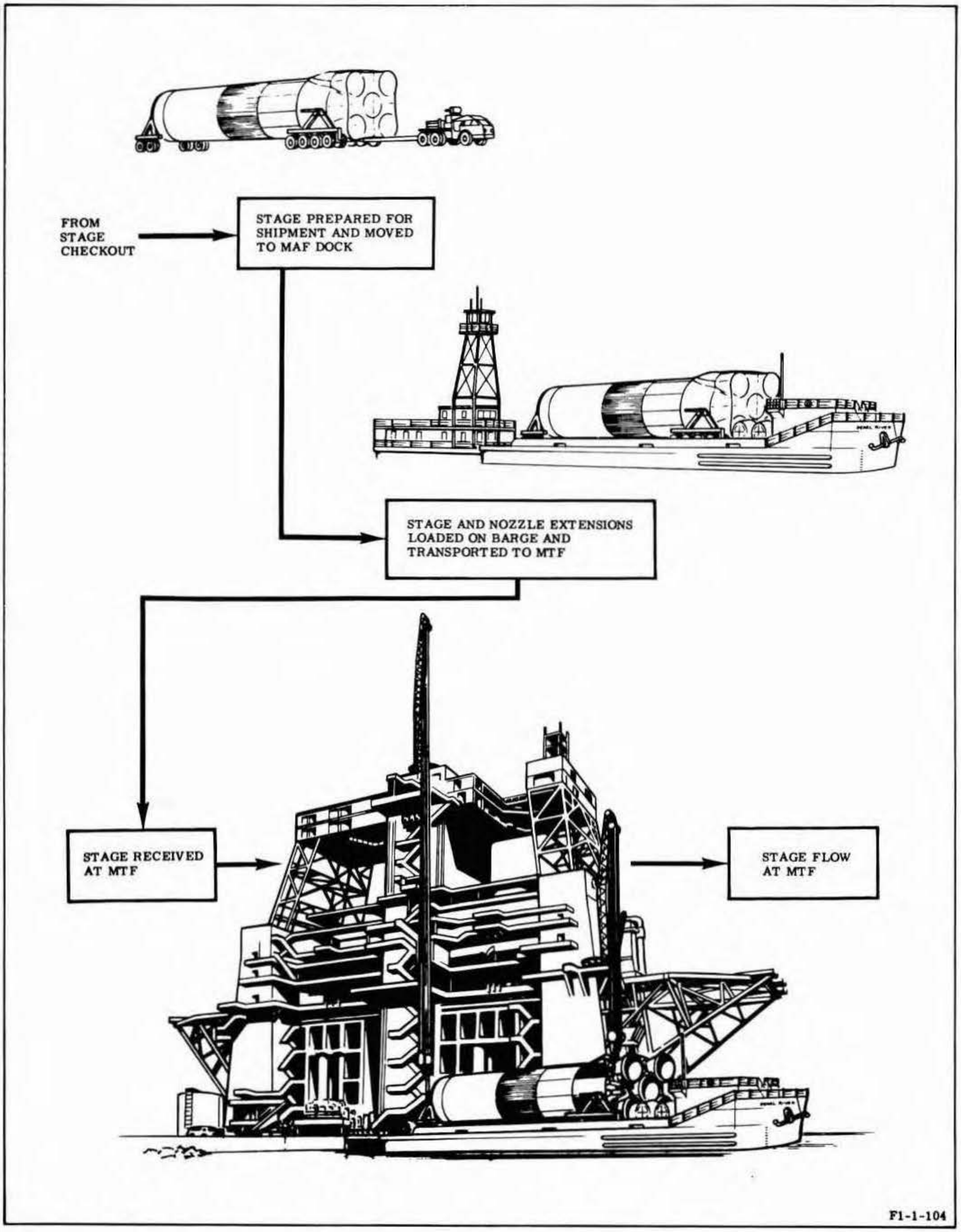

Figure 1-64. Stage Shipment to MTF

and the stage is pulled to the MAF dock. The stage is loaded onto the barge and secured. The nozzle extensions are loaded on low-bed trailers, towed to the MAF dock, loaded on the barge using a mobile hoist, and secured. The barge is then moved to MTF by tug.

1-182. <u>STAGE FLOW AT MTF</u>. (See figure 1-65.)

1-183. The stage is received at MTF and installed in the test stand. The engine covers are removed, and receiving inspection is performed. The nozzle extensions, slave hardware (normally stored at MTF), and MTF static test instrumentation are installed; then a pre-static checkout is performed. Thermal insulation is not required for static test, therefore it is not installed. Engine maintenance is done and modifications are made as required during engine flow at MTF. Upon completion of pre-firing preparations, the static firing test is performed. After static test, the engines are inspected; the test instrumentation, slave hardware, and nozzle extensions are removed; a pre-shipment inspection is performed; and the stage and nozzle extensions are removed from the test stand and loaded on the barge for return to MAF.

1-184. STAGE INSTALLATION IN TEST STAND.

1-185. When the stage arrives at MTF, the barge is docked next to the test stand. Test stand overhead cranes are attached to the forward and aft ends of the stage; the stage is lifted clear of the stage transporter and barge, rotated to the vertical position, and positioned into the test stand. During rotation to the vertical position, the thrust chamber and exhaust manifold are monitored for fuel leakage. The stage is secured to the test stand with mechanical holddowns; stage/facility propellant, hydraulic, pneumatic, and electrical connections are secured; and engine covers and engine oxidizer and fuel inlet screens are removed.

1-186. ENGINE RECEIVING INSPECTION.

1-187. After the stage is installed in the test stand, the engines undergo an overall visual receiving inspection. Each engine is inspected for damage, corrosion, and missing equipment and for evidence of fluid in drain line exits. It is verified that corrosion preventive and aluminum-foil tape is present in specified areas, the engine soft goods installed life is within specified limits, and there are no voids in the turbopump housing cavity filler material. The fuel overboard drain system isolation polyethylene bags are visually inspected for fluid. If fluid is present, the bags are emptied and the quantity of fluid is measured. Engine orifice sizes and serialized components are checked against those listed in the Engine Log Book. Detailed inspection requirements for installed engines received at MTF are in R-3896-11.

1-188. INSTALLATION OF NOZZLE EXTENSIONS, SLAVE HARDWARE, AND MTF STATIC TEST INSTRUMENTATION.

1-189. The nozzle extensions, slave hardware, and MTF static test instrumentation are installed on the engines after the stage is installed in the test stand and after receiving inspection. Using Engine Handler Sling G4052 and overhead cranes, the nozzle extension is removed from the barge and from Nozzle Extension Handling Fixture G4080 and Handling Adapter G4081 and placed on Engine Vertical Installer G4049 on the lower stand work platform. The installer, with nozzle extension, is positioned below the engine; then the nozzle extension is installed on the engine, and the installer lowered. The polyethylene bags are removed from the fuel overboard drain system, and the slave fuel, oxidizer, and nitrogen overboard drain lines are installed. The slave igniter harness and MTF static test instrumentation are then installed and connected. Detailed installation requirements are in R-3896-11. Detailed nozzle extension handling requirements are in R-3896-9.

1-190. STAGE PRE-STATIC CHECKOUT.

1-191. The stage pre-static checkout is performed on all engine and stage systems. Immediately preceding pre-static checkout, Thrust Chamber Throat Security Closure G4089 is removed and Thrust Chamber Throat Plug G3136 is installed. The checkout consists of electrical, hydraulic, and pneumatic leak and function tests. A simulated static test, which simulates stage preparation, engine start, ignition, mainstage, and cutoff sequencing, is performed to verify stage acceptability for static test. Detailed pre-static checkout requirements are in R-3896-11.

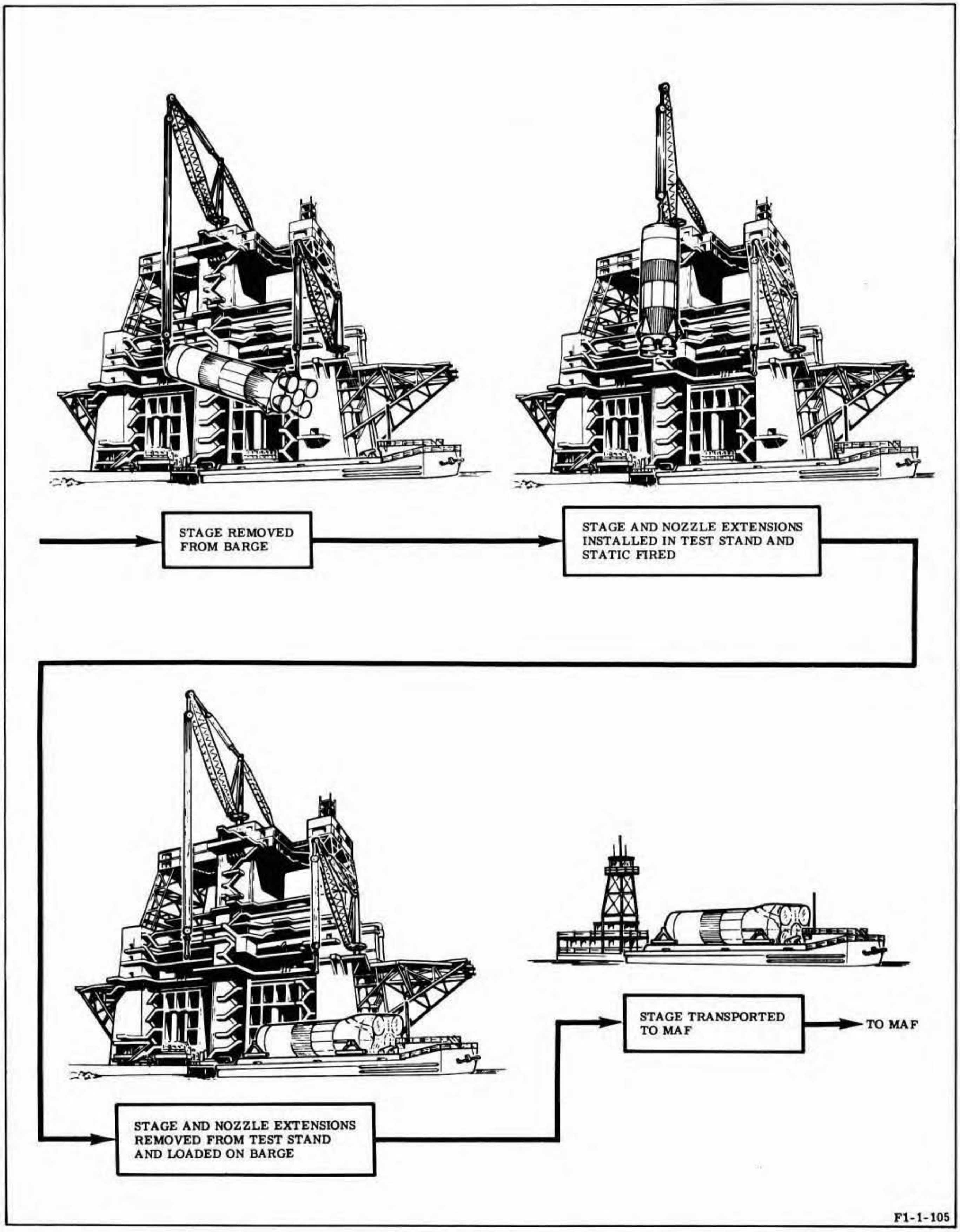

Figure 1-65. Stage Flow at MTF

1-192. STATIC TEST.

1-193. When all required checkout procedures, modifications, and maintenance are completed, and the Thrust Chamber Throat Plug G3136 is removed, the hypergol cartridge and pyrotechnic igniters are installed and checked out and the test area is cleared in readiness for static test. A 125-second, uninterrupted-duration stage static test is made to checkout all electrical-electronic, propulsion, mechanical, pressurization, propellant, and control systems that function during actual countdown, launch, and flight. Measurements of the static test are recorded and processed to determine stage acceptability and flight readiness. The engine start for the stage is a 1-2-2 sequence: the center engine starts first, and the remaining outboard engines start in opposed groups of two. The engine cutoff is a 3-2 sequence: the center engine and two opposite outboard engines cut off first; then the remaining two outboard engines cut off. The single-engine start and cutoff sequence flows are in figures 1-57 and 1-58.

1-194. ENGINE INSPECTION AFTER STATIC TEST.

1-195. The engine and nozzle extension are inspected visually after static test to verify that damage did not occur during the test. Detailed inspection requirements are in R-3896-11 and include inspecting for exterior damage and missing aluminum tape between thrust chamber exhaust manifold and thrust chamber tubes; inside of thrust chamber for tube and injector damage, injector contamination, and liquid leakage. Other inspections are for tension tie deformation, bent or broken studs, nozzle extension for carbon deposits around flange area, and internal damage and erosion.

1-196. STATIC TEST DATA REVIEW.

1-197. The static test data is reviewed after static test to determine that the engine is operating within specified limits. Test instrumentation readings are examined to detect abnormalities, sudden shifts, oscillations, or performance near the minimum or maximum limits.

1-198. TURBOPUMP PRESERVATION.

1-199. The turbopump is preserved within 72 hours after static test. After removing fluid through the turbopump No. 3 bearing drain line, the turbopump bearings are purged with gaseous nitrogen, and five gallons of preservative oil is supplied to the bearings while the turbopump is slowly rotated. The fluid is then drained through the No. 3 bearing drain line, and the bearings are again purged with gaseous nitrogen. The preservation date is recorded in the Engine Log Book.

1-200. REMOVAL OF NOZZLE EXTENSIONS, SLAVE HARDWARE, AND MTF STATIC TEST INSTRUMENTATION.

1-201. Engine Vertical Installer G4049 is positioned below the nozzle extension and the nozzle extension removed from the engine and lowered onto the installer. Using Engine Handler Sling G4052 and overhead cranes, the nozzle extension is removed from the installer, installed on Nozzle Extension Handling Fixture G4080, and the loaded nozzle extension installed on Handling Adapter G4081. The slave hardware, consisting of fuel overboard drain lines and the igniter harness, is removed, cleaned, tested, and repaired or replaced, as required, for reuse during the next static test. The fuel overboard drain system is isolated using clean polyethylene bags. The expended igniters and hypergol cartridge are removed. The MTF static test instrumentation is disconnected and removed and the instrumentation ports plugged immediately by incorporating the applicable retrofit kit specified in Modification Instruction R-5266-391 (ECP F1-391). The Thrust Chamber Throat Security Closure G4089 is installed. Detailed removal requirements are in R-3896-11. Detailed nozzle extension handling requirements are in R-3896-9.

1-202. INSTALLED-ENGINE INSPECTION BEFORE STAGE SHIPMENT TO MAF.

1-203. The engine is inspected before shipment to MAF and after all post-static-test tasks are complete. Each engine is visually inspected for damage, corrosion, and missing equipment; for evidence of fluid in drain line exits or on the engine exterior; and for surface wetting on the hydraulic control system exterior. It is verified that corrosion preventive and aluminum-foil tape is present in specified areas, line markings are correct, the humidity indicator in the thrust chamber throat security closure indicates blue, and there are no voids in the turbopump housing cavity filler material. The fuel overboard drain system isolation polyethylene bags are visually inspected for fluid. If fluid is present, the bags are emptied and the quantity of fluid is measured. All engine protective closures are installed upon completion of visual inspection. It is verified that the humidity indicator in the thrust chamber throat security closure indicates blue at the time of shipment. Detailed inspection requirements are in R-3896-11.

1-204. STAGE REMOVAL FROM TEST STAND.

1-205. After engine visual inspection, the engines and stage are prepared for removal from the test stand. The engine and stage covers are installed; stage/facility propellant, hydraulic, pneumatic, and electrical connections are disconnected; and mechanical holddowns are removed. Test stand overhead cranes are attached to the forward and aft ends of the stage; the stage is lifted clear of the test stand, rotated to the horizontal position, and installed on the stage handler on the barge. The oxidizer pump seal is purged during engine rotation to the horizontal position and for 30 minutes (minimum) thereafter. The nozzle extensions, installed on Nozzle Extension Handling Fixtures G4080 and Handling Adapters G4081, are removed by overhead crane and loaded on the barge. The stage transporter and nozzle extensions are secured on the barge for shipment. A final updating of the Engine Log Book is made before shipment to MAF.

1-206. STAGE SHIPMENT TO MAF.

1-207. The barge, containing the stage and nozzle extensions, is moved from MTF to MAF by tug. Upon arrival at the MAF dock, a tractor is connected to the stage transporter, and the stage is pulled from the barge and towed to the Stage Checkout Building. The nozzle extensions are loaded on low-bed trailers, using a mobile hoist, and towed from the barge to the nozzle extension storage area.

1-208. STAGE FLOW AT MAF. (See figure 1-66.)

1-209. The stage is positioned in the Stage Checkout Building at MAF, and workstands and platforms are installed to aid access during inspection and checkout. The engines undergo a receiving inspection, refurbishment, post-static checkout, and pre-shipment inspection. A storage period may be required after refurbishment, if so, the stage is prepared for storage and stored for a specified time before post-static checkout.

1-210. ENGINE RECEIVING INSPECTION.

1-211. After positioning the stage in the Stage Checkout Building, the engines undergo an overall visual receiving inspection. Each engine is inspected for damage, corrosion, and missing equipment and for evidence of fluid in drain line exits. It is verified that corrosion preventive and aluminum-foil tape is present in specified areas and that there are no voids in the turbopump housing cavity filler material. The fuel overboard drain system isolation polyethylene bags are visually inspected for fluid. If fluid is present, the bags are emptied and the quantity of fluid is measured. Engine orifice sizes and serialized components are checked against those listed in the Engine Log Book. It is verified that the humidity in the thrust chamber throat security closure indicates blue. Detailed inspection requirements for installed engines received at MAF are in R-3896-11.

1-212. ENGINE REFURBISHMENT.

1-213. The engine is refurbished after receiving inspection. The engines are first cleaned of any foreign matter and corrosion that may have resulted from exposure to rain, humidity, sand, or dust. The oxidizer dome insulator is installed in accordance with requirements specified in R-3896-6. The flight igniter harness is installed, tested, and connected in accordance with requirements specified in R-3896-11. Outstanding maintenance or modification, as required by ECPs and EFIRs, is done during the refurbishment period.

1-214. STAGE STORAGE.

1-215. Storage of installed engines is scheduled following completion of refurbishment. The amount of time the stage remains in storage is determined by the Saturn V vehicle launch schedule. Stage storage, in excess of six months, requires that engine post-static checkout be performed when the stage is removed from storage. Installed engines are visually inspected for damage, corrosion, and missing equipment, and for evidence of fluid in oxidizer and nitrogen purge overboard drain lines. It is also verified that corrosion preventive and aluminum-foil tape is present in specified areas, the gimbal boot is installed, there are no voids in the turbopump housing cavity filler material, and that fuel overboard drain system isolation polyethylene

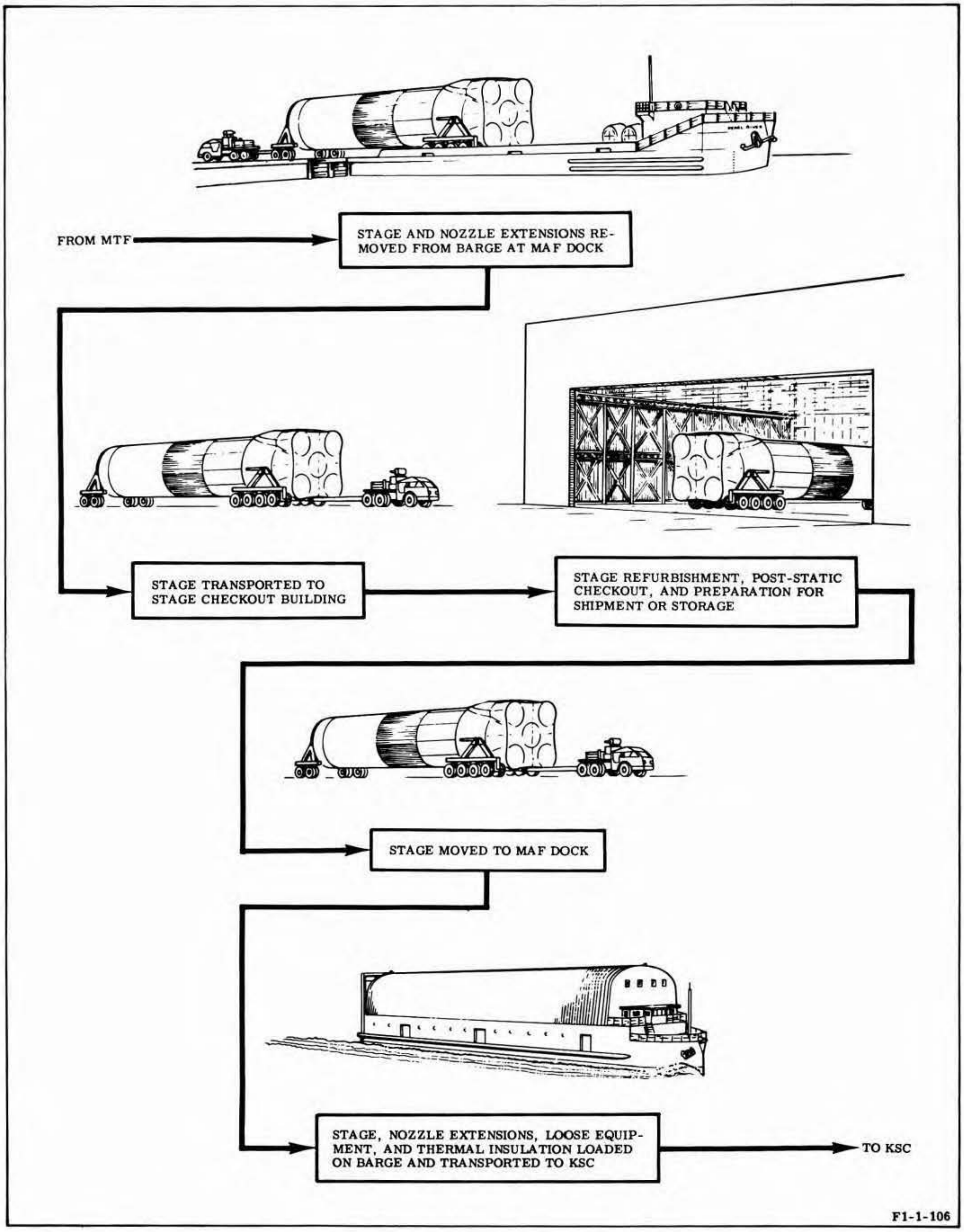

Figure 1-66. Stage Flow at MAF

bags do not contain fluid. If fluid is present, the bags are emptied and the quantity of fluid is measured. The turbopump preservation status is checked in the Engine Log Book and the turbopump is serviced if required; desiccants are installed in the thrust chamber throat security closure and the closure is installed; and humidity indicators are checked for a blue indication. The engine-to-stage gimbal actuators are locked to prevent engine movement, and the stage is stored in an environmentally controlled area. The engines are inspected periodically during storage. Detailed inspection requirements for installed engines in storage are in R-3896-11.

1-216. POST-STATIC CHECKOUT.

1-217. The post-static checkout is done after refurbishment tasks are completed, after a stage is removed from storage on which a post-static checkout had not been previously accomplished, or after stage storage has exceeded six months. The post-static checkout consists of complete electrical, hydraulic, and pneumatic leak and functional tests of the installed engines and stage systems. The post-static checkout is completed with a simulated launch test that consists of stage preparations, engine start, ignition, mainstage, liftoff, flight, and engine cutoff in the prescribed sequence to assure flight readiness of the engines and stage. Post-static checkout includes a flight instrumentation function test, turbopump torque test and heater function test, leak and function test of the bearing coolant control valve, hypergol manifold, thrust OK pressure switches, thrust chamber prefill line, ignition monitor valve, oxidizer dome and gas generator oxidizer injector purge system, oxidizer pump seal purge system, cocoon purge system, and hydraulic system. Leak test of the thrust chamber, heat exchanger helium and oxidizer systems, propellant fuel and oxidizer systems, exhaust system, and valve timing function tests are also accomplished. Engine start and cutoff flow sequences are in figures 1-57 and 1-58. Installed engine tests are conducted in accordance with requirements specified in R-3896-11.

1-218. INSTALLED-ENGINE INSPECTION BEFORE STAGE SHIPMENT TO KSC.

1-219. The installed engine is inspected before shipment to KSC and the Engine Log Book is reviewed after post-static checkout tasks are completed. Each engine is visually inspected for damage, corrosion, and missing equipment; for evidence of fluid in drain line exits, fluid on the engine exterior; and for surface wetting on the hydraulic control system exterior. It is verified that corrosion preventive and aluminum-foil tape is present in specified areas, that line markings are correct, that the humidity indicator in the thrust chamber throat security closure indicates blue, and that turbopump housing cavity filler material does not contain voids. The fuel overboard drain system isolation polyethylene bags are visually inspected for fluid. If fluid is present, the bags are emptied and the quantity of fluid is measured. The turbopump preservation status is checked in the Engine Log Book, and the turbopump is serviced if required. A final updating of the Engine Log Book is made before engine shipment to KSC. Detailed procedures for inspecting the installed before shipment to KSC are in R-3896-11.

1-220. STAGE SHIPMENT TO KSC.

1-221. After the engine pre-shipment visual inspection is completed, the forward and aft stage covers are installed, workstands and platforms removed, and the stage pulled from the Stage Checkout Building to the MAF dock for transport to KSC by barge. The nozzle extensions, engine loose equipment, and thermal insulation are loaded on low-bed trailers and transported to the MAF dock where they are removed from the trailers and loaded on the barge and secured for shipment. Handling requirements for nozzle extensions and loose equipment are in R-3896-9. After the nozzle extensions, loose equipment, and thermal insulation boxes are loaded and secured, the stage is loaded onto the barge and secured. The barge is then moved to KSC by tug.

1-222. STAGE FLOW AT KSC. (See figure 1-67.)

1-223. The barge arrives at the KSC dock where the stage, nozzle extensions, loose equipment, and thermal insulation boxes are off-loaded. The stage is towed from the dock to the Vertical Assembly Building (VAB). The nozzle extensions, loose equipment, and thermal insulation boxes are loaded on low-bed trailers and transported to the VAB. The stage is removed from the stage transporter and erected onto the Launch Umbilical Tower (LUT) where the engine visual receiving inspection, loose equipment installation, modification and maintenance, stage and engine leak and functional tests, and thermal

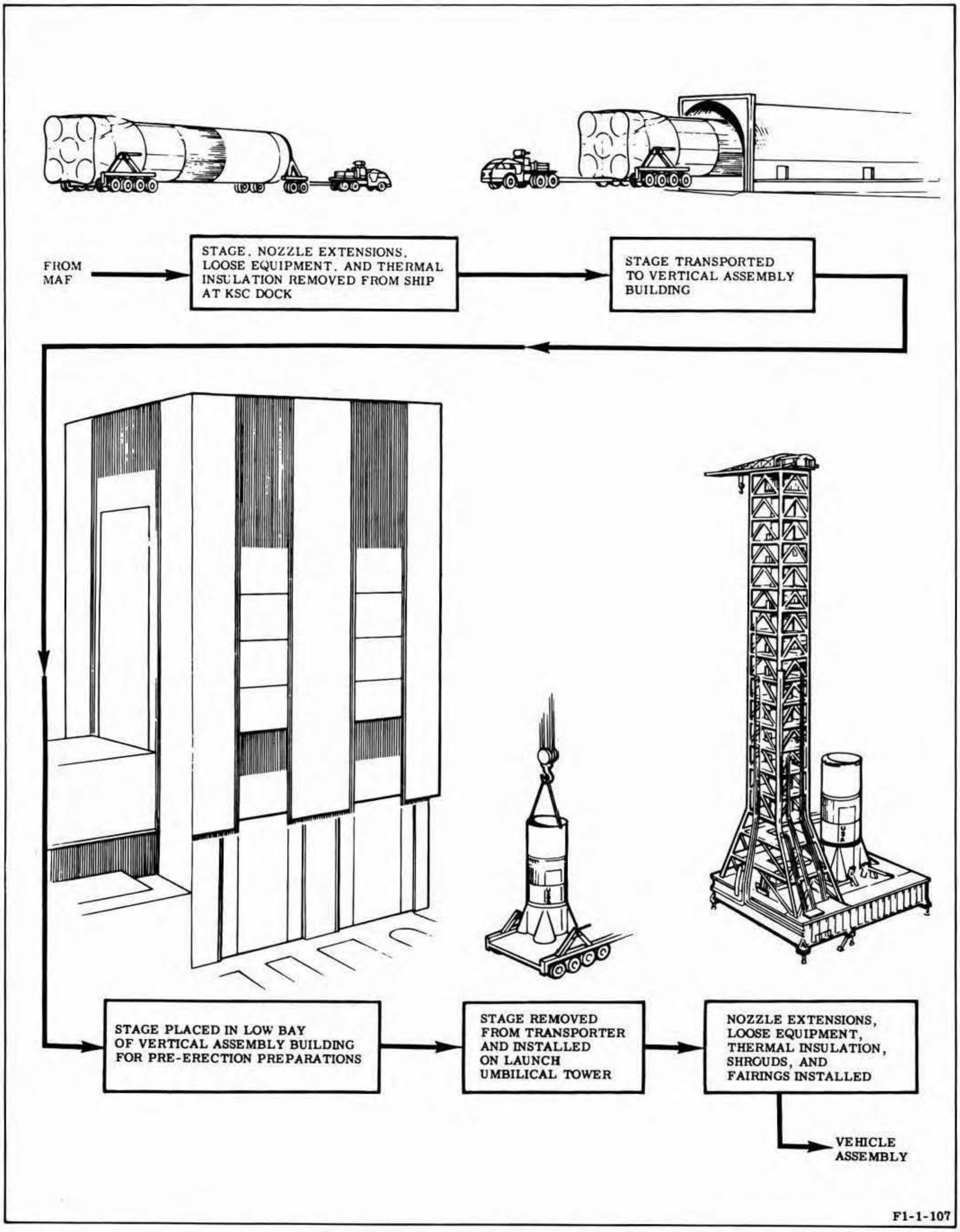

Figure 1-67. Stage Flow at KSC

insulation installations are accomplished. These tasks are conducted concurrently with the Saturn V vehicle assembly and testing. A final updating of the Engine Log Book is made after engine activities during stage flow are complete.

1-224. STAGE INSTALLATION ONTO LAUNCH UMBILICAL TOWER (LUT).

1-225. The stage is received in the low bay of the VAB. The forward and aft stage covers are removed and the stage and engines prepared for rotation and installation onto the LUT. The Engine Service Platform (ESP) and the LUT are moved into the high bay. The stage, on the transporter, is moved from the transfer aisle to the erection bay where the stage is removed from the transporter and rotated to the vertical position by overhead cranes. The stage is then moved by high bay crane and erected on the LUT and secured with four mechanical holddowns. The ESP and LUT level platforms are positioned around the engines for receiving inspection.

1-226. ENGINE RECEIVING INSPECTION.

1-227. After the stage is installed onto the LUT, protective closures are removed and the engines undergo an overall visual receiving inspection. The engines are inspected to verify that damage did not occur during shipping and that all equipment listed on shipping documentation was received. Each engine is inspected for damage, corrosion, and missing equipment; for evidence of fluid in drain line exits, fluid on the engine exterior, and for surface wetting on the hydraulic control system exterior. It is verified that corrosion preventive and aluminum-foil tape is present in specified areas, the engine soft goods installed life is within specified limits, there are no voids in the turbopump housing cavity filler material, and that turbopump and outrigger arm surfaces do not contain scratches through paint. The fuel overboard drain system isolation polyethylene bags are visually inspected for fluid. If fluid is present, the bags are emptied and the quantity of fluid is measured. Engine orifice sizes and serialized components are checked against those listed in the Engine Log Book. Oxidizer and fuel high-pressure duct covers and thrust chamber covers are installed after visual inspection completion. Detailed inspection requirements for installed engines received at KSC are in R-3896-11.

1-228. LOOSE EQUIPMENT INSTALLATION.

1-229. The engine loose equipment is installed after engine receiving inspection is completed. The loose equipment consists of the nozzle extension, oxidizer overboard drain line, fuel overboard drain line, nitrogen purge overboard drain line, and fuel inlet elbow-to-interface boots. Using Engine Handler Sling G4052 and overhead cranes, the nozzle extension is removed from Nozzle Extension Handling Fixture G4080 and Handling Adapter G4081 and placed on the Nozzle Extension Installer. The five nozzle extensions and Nozzle Extension Installers are placed on the Engine Service Platform in their respective engine positions. The Engine Service Platform is then raised from ground level up through the opening in the LUT until the nozzle extension flanges are approximately 5 inches below the thrust chamber exit flanges. Final adjustments are made and the mating of the extension flanges to the thrust chamber exit flanges is done with the individual Nozzle Extension Installers. After the nozzle extensions are secured to the engines, the overboard drain lines are attached and secured. Loose equipment is installed in accordance with requirements specified in R-3896-11. Detailed nozzle extension handling requirements are in R-3896-9. The stage fins and engine shrouds are installed in accordance with stage contractor requirements.

1-230. MODIFICATION AND MAINTENANCE.

1-231. The engine modifications may be made and maintenance tasks may be performed, if required, throughout the stage flow at KSC. Modifications are made as a result of approved ECP or EFIR action, and scheduled through joint agreement between the customer, stage contractor, and engine contractor. The engine maintenance is performed, if required, as a result of discrepant hardware noted during receiving inspection or engine leak and functional testing.

1-232. STAGE FUNCTIONAL TEST.

1-233. The stage functional testing is started after stage installation onto the LUT. The electrical, hydraulic, and pneumatic leak and functional tests are made in conjunction with vehicle assembly. The stage functional test consists of a flight instrumentation function test, turbopump torque test and heater function test, engine sequence verification test, leak and function test of the bearing coolant system, hypergol manifold, thrust OK pressure switches, thrust chamber prefill line, ignition monitor valve, oxidizer dome and gas generator oxidizer injector purge system, oxidizer pump seal purge system, cocoon purge system, and hydraulic system. A leak test of the thrust chamber, heat exchanger helium and oxidizer systems, propellant fuel and oxidizer systems, exhaust system, and valve timing function tests is also performed. Installed engine tests are performed in accordance with requirements specified in R-3896-11.

1-234. THERMAL INSULATION INSTALLATION.

1-235. The thermal insulation (TIS) is installed after engine leak and functional testing is complete. The TIS is installed to completely envelop the engine and provide protection from extreme temperatures created by plume radiation and backflow during cluster engine flight. To allow access for verifying the integrity of engine components and systems and to prevent possible insulator damage from fluid spillage, the TIS is not installed until engine testing is complete. The required sequence and methods for TIS installation is in R-3896-6. After the thermal insulation is installed and before moving the Saturn V vehicle from the VAB, an engine environmental cover is installed on each S-IC engine, from the thrust chamber throat area to the exit end of the nozzle extension, to protect the thermal insulation from inclement weather. The cover is wrapped around the thrust chamber and nozzle extension and placed so that engine overboard drain lines are exposed through holes provided in the cover, and access flaps, four places, are located to provide access to drain ports and igniters. Overlapping edges of the cover are laced together, excess material is gathered around the thrust chamber throat and folds tied, and the cover drawn tight under exit end of nozzle extension. Detailed requirements for installation of the cover are in R-3896-11.

1-236. SATURN V VEHICLE FLOW AT KSC. (See figure 1-68.)

1-237. While the S-IC Stage is being received and erected in the VAB, the S-II Stage, S-IVB Stage, and Instrumentation Unit are received in the VAB and placed in the checkout bays where they undergo a complete pre-erection checkout. Upon completion of S-IC Stage erection, the Saturn V Vehicle assembly is started, concurrently with S-IC Stage testing. When the fins, fairings, engine shrouds, and nozzle extensions are installed, the S-IC Stage assembly is complete. The Instrumentation Unit is moved into the high bay, placed on a platform near the S-IC Stage, and an S-IC Stage-Instrumentation Unit-checkout is performed. Upon completion of pre-erection checkout, the S-II Stage is moved from the checkout bay to the high bay and mated with the S-IC Stage. The S-IVB Stage is moved from the checkout bay and mated with the S-II Stage, and the Instrumentation Unit is removed from the platform and mated with the S-IVB Stage, completing the assembly of the Launch Vehicle (LV). After individual modules are checked out at the Manned Spacecraft Operations Building (MSOB), the Apollo spacecraft, consisting of the mated lunar excursion, and service and command modules, is moved into the VAB and mated mechanically (lunar excursion module-adapter to forward mating flange of instrumentation unit).

1-238. VEHICLE TESTING.

1-239. After the Apollo spacecraft and launch vehicle are mechanically mated, spacecraft modules are connected to their umbilicals from the umbilical tower of the mobile launcher and pre-power-on tests are made. When it has been determined that all flight and ground systems are satisfactory, full power is applied to the spacecraft. The spacecraft is then mated electrically to the launch vehicle and combined system tests, consisting of simulated countdowns and flights that exercise both flight and ground systems, are made. During the final combined system testing phase, the spacecraft and launch vehicle ordnance, minus pyrotechnics, are installed including the launch escape system. When the combined system testing is complete, the test data is reviewed, and if acceptable, the Saturn V vehicle is ready to be moved to the launch pad.

1-240. TRANSFERRING VEHICLE TO LAUNCH PAD.

1-241. The Apollo/Saturn V is transported from the VAB to the launch pad by the crawler transporter. The extendible platforms that enclosed the vehicle in the VAB are retracted, connections between the mobile launcher terminals and the terminals in the high bay are disconnected, the doors of the high bay are opened, and the transporter brought in and

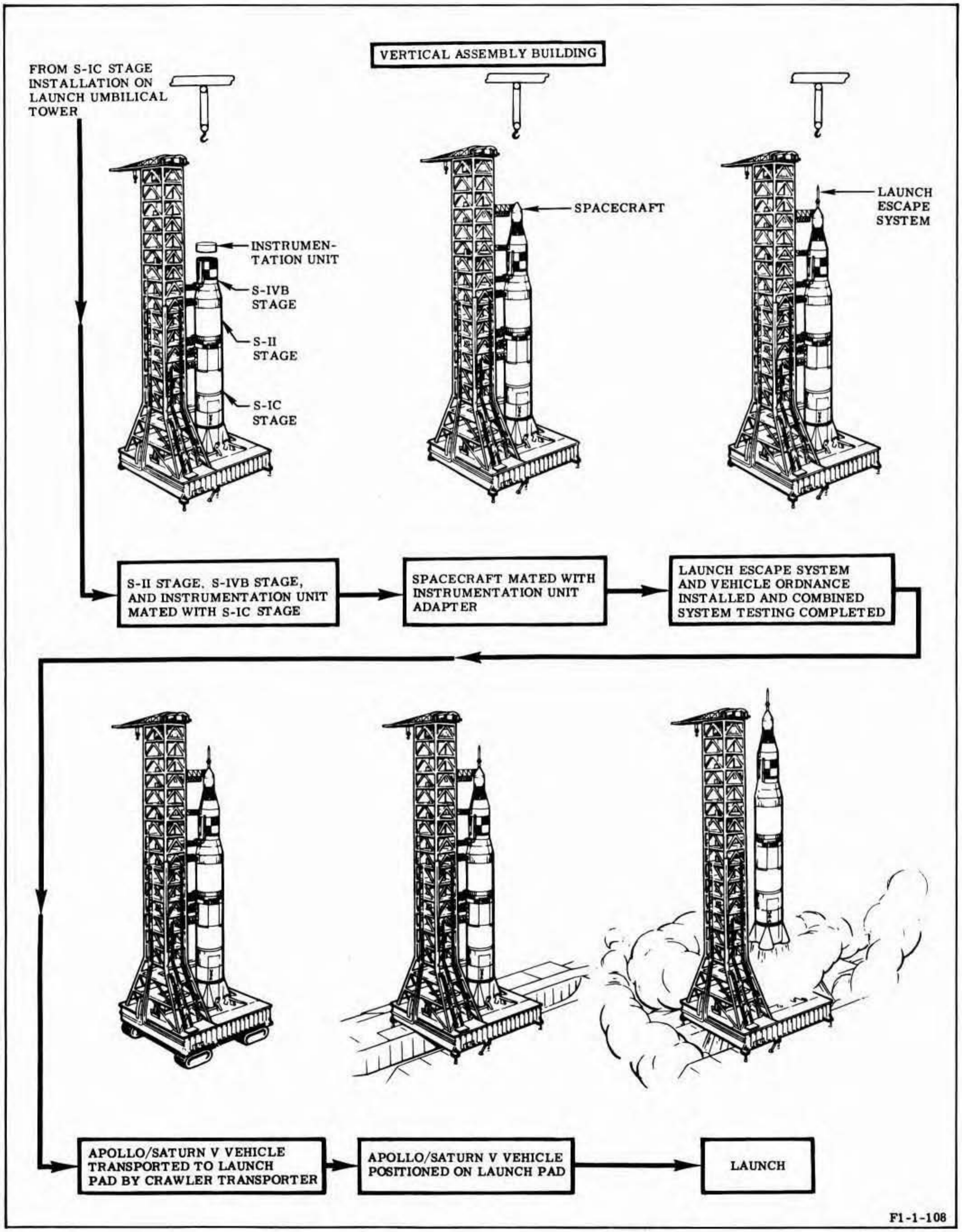

Figure 1-68. Saturn V Vehicle Flow at KSC

positioned beneath the platform section of the launcher. Hydraulic jacks are extended from the transporter to lift the launcher clear of its pedestals. Then, at a speed of approximately 1 mph, the transporter carries the launcher and the fully assembled Apollo/Saturn V to the launch pad for positioning.

1-242. LAUNCH PREPARATIONS AND TESTING.

1-243. After all electrical and pneumatic lines to the Apollo/Saturn V are reconnected through terminals at the base of the mobile launcher, and propellant lines, also connected through the launcher, are verified as correct, and it has been ascertained that no changes have occurred in the vehicle since it left the VAB, tests are made on the communication links to the vehicle. Measurements are also taken on systems such as the cutoff abort unit, radio-frequency, tank pressurization, and launch vehicle stage propellant utilization system. A Flight Readiness Test (FRT), backup guidance system test, and S-IC fuel jacket/oxidizer dome flush and purge are performed. Hypergolic propellants are loaded in the spacecraft tanks, RP-1 fuel is loaded in the launch vehicle tanks, and Countdown Demonstration Tests (CDDT) are performed. Liquid oxygen and liquid hydrogen are loaded into the launch vehicle during the last few hours of the countdown.

1-244. SATURN V VEHICLE LAUNCH.

1-245. The data in this paragraph is only used to describe a typical vehicle launch and is not intended to represent actual launch data. With S-IC stage engines and launch vehicle preparations complete, the S-IC engines are fired, all holddown arms are released, and the vehicle committed for liftoff. The vehicle rises nearly vertically from the launch pad, for approximately 450 feet, to clear the launch umbilical tower. During liftoff, a yaw maneuver is executed to provide tower clearance in the event of adverse wind conditions or deviations from nominal flight. After clearing the tower, a tilt and roll maneuver is initiated to achieve the flight attitude and proper orientation from the selected flight azimuth. The S-IC center engine cutoff occurs at 2 minutes 5.6 seconds after first vehicle motion to limit the vehicle acceleration to a nominal 3.98 G-load. The S-IC outboard engines are cutoff at 2 minutes 31 seconds after first vehicle motion. Following S-IC engines cutoff, ullage rockets are fired to seat S-II stage propellants, the S-IC/S-II stages separate, and retrorockets back the S-IC stage away from the flight vehicle. A time interval of 4.4 seconds elapses between S-IC engines cutoff and the time the S-II engines reach 90 percent operating thrust level. Following the programmed burn of S-II engines, the S-II/S-IVB stages separate and the S-IVB engine places the flight vehicle in an earth parking orbit.

1-246. POST-FLIGHT DATA EVALUATION.

1-247. The post-flight data is evaluated to determine that the S-IC stage engines operated within the specified values during vehicle launch. The engine parameters are reviewed for abnormalities, sudden shifts, oscillations, or performance near the minimum or maximum limits. The engine performance values are then reviewed and compared to the predicted engine values to determine that all engine objectives were satisfactorily met.

1-248. UNSCHEDULED MAINTENANCE FLOW.

1-249. Unscheduled maintenance consists of those operations required in addition to normal engine and hardware processing, to repair damage, replace discrepant components or hardware, perform modifications and EFIRs, decontaminate, re-preserve, repair thermal insulation, or rectify any unsatisfactory condition. The unscheduled maintenance tasks are done at a specified time and at the location designated, during the normal engine flow process. The locations where unscheduled maintenance can be done are Rocketdyne, MAF, MTF, or KSC; depending on the extent of the task, urgency, capabilities of the location, and how schedules are affected. The location established for complete component maintenance, repair, and testing is the CM&R room at MAF. This facility provides component maintenance support for MAF, MTF, and KSC. Limited repairs on components can be made in-place on the engine at MAF, MTF, or KSC as directed by the customer. The necessary hardware required for supporting engine and component repairs at field locations is stored and maintained at MAF.

1-250. UNSCHEDULED ENGINE REPAIR AND SERVICING.

1-251. Unscheduled engine repair and servicing consists of various types of repairs and servicing tasks that are done whenever practical to correct any discrepancies that may exist, perform special inspections, and to update the engine configuration. The various repairs and servicing tasks may include such items as: braze and weld repair thrust chamber tubes, remove and replace components, clean contaminated areas, remove corrosion, touch-up of damaged surface finishes, modifications, EFIRs, post-maintenance tests, lubricate, preserve, and replace desiccants.

1-252. COMPONENT REPAIR.

1-253. Uninstalled engine components from MAF, MTF, or KSC that require repair, modification, analysis or testing are processed in the environmentally controlled CM&R room at MAF. Processing engine components in the CM&R room is required to repair a discrepant component from an engine, perform modifications, failure analysis, inspections, recycle testing, or pre-installation testing. After processing in the CM&R room, the components are designated to be installed on an engine, returned to the engine support hardware center as a spare, returned to the manufacturer, or considered as surplus or scrap. Detailed procedures for component maintenance and repair are in R-3896-3.

1-254. SUPPORT HARDWARE.

1-255. Engine hardware required for supporting the activities at MAF, MTF, and KSC is maintained in the Engine Support Hardware Center at MAF. The Michoud facility is the primary hardware supply center, since the majority of engine and component activity takes place at this location. At MTF and KSC a limited inventory of hardware is maintained to make sure of immediate availability of those items frequently used at these locations. Whenever an urgent need arises at either MTF or KSC, and the hardware required is not locally available, the item is expedited to that location directly from MAF or Rocketdyne.

SECTION I

DESCRIPTION AND OPERATION

1-1. SCOPE. This section contains a general description of the F-1 propulsion system and a detailed description of each subsystem and component. Engine operation from the preparation phase through and including the engine cutoff phase is defined. Also included, are external inputs necessary for engine operation, typical engine operating parameters, and a description of the flow the engine follows from the time it is accepted by the Customer through Apollo/ Saturn V launch.

1-2. F-1 ROCKET ENGINE.

1-3. The F-1 propulsion system was developed to provide the power for the booster flight phase of the Saturn V vehicle. Five engines are clustered in the S-IC stage of the Saturn V to obtain the necessary 7,610,000 pounds thrust.

1-4. The engine features a two-piece thrust chamber that is tubular-walled and regeneratively cooled to the 10:1 expansion ratio plane, and double-walled and turbine gas cooled to the 16:1 expansion ratio plane; a thrust chamber mounted turbopump that has two centrifugal pumps spline-connected on a single shaft driven by a two-stage, direct-driven turbine; one-piece rigid propellant ducts that are used in pairs to direct the fuel and oxidizer to the thrust chamber; and a hypergolic fluid cartridge that is used for thrust chamber ignition.

1-5. The engine is within an envelope of approximately 12.5 feet in diameter and 19.2 feet long and weighs approximately 18,600 pounds dry. Refer to section II for specific dimensions and weight. Thrust vector changes are achieved by gimbaling the entire engine. The gimbal block is located on the thrust chamber dome, and actuator attach points are provided by two outriggers on the thrust chamber body.

1-6. Component locations on the engine in the horizontal position are basically referenced to No. 1 (left) (figure 1-1) or No. 2 (right) (figure 1-2) sides of the engine as viewed from the exit end of the thrust chamber with the turbopump at 12 o' clock (top) and the hypergol manifold assembly at 6 o' clock (bottom). Component locations on the engine in the vertical position are referenced to the principal component on the four sides of the engine (eg, gas generator side (No. 1), engine control valve side (No. 2), turbopump side, and hypergol manifold side). A view of the forward end of the engine is shown in figure 1-3.

1-7. ENGINE PHYSICAL DESCRIPTION.

1-8. The F-1 engine is a single-start, fixed-thrust, liquid bipropellant engine, calibrated to develop a sea-level-rated thrust of 1,522,000 pounds with a specific impulse (I_{sp}) of 265.3 seconds. Engine propellants are liquid oxygen and propellant kerosene fuel at a mixture ratio of 2.27:1. The propellant kerosene fuel is used as the working fluid for the gimbal actuators and for the engine control system and is also used as the turbopump bearing lubricant. The F-1 engine is comprised of seven operational systems:

(1) A propellant feed system, which supplies pressurized propellants for combustion and hydraulic pressure for the engine control system.

(2) An ignition system, which initiates combustion in the gas generator and the thrust chamber.

(3) A gas generating system, which produces the energy to drive the turbopump and condition propellant tank pressurants.

(4) An engine control system, which regulates the start, operating level, and shutdown of the engine.

(5) A flight instrumentation system, which measures selected engine parameters for monitoring and evaluating the operational characteristics of the engine.

(6) An environmental conditioning system, which protects the engine from extreme temperature environment caused by plume radiation and backflow during flight.

(7) A purge and drain system, which inhibits contamination and facilitates the overboard disposition of expended fluids. Detailed information of the engine system and its components is in the following paragraphs. An engine fluid schematic (figure 1-4), engine leading particulars (figure 1-5), and an engine performance schematic (figure 1-5A) are included to support the text. Detailed information on engine operation is presented in paragraphs 1-121 through 1-133.